Systems" Chapter in NFPA 72 and the "Inspection and Testing Form" in the "Records" Section of the "Inspection, Testing and Maintenance" Chapter in NFPA 72.

7. All wiring shall be tested for continuity, shorts and grounds before the system is activated.

E. Reacceptance Testing: Perform reacceptance testing to verify the proper operation of added or replaced devices and appliances.

F. Fire-alarm system will be considered defective if it does not pass tests and inspections.

G. Prepare test and inspection reports.

H. Maintenance Test and Inspection: Perform tests and inspections listed for weekly, monthly, quarterly, and semiannual periods. Use forms developed for initial tests and inspections.

I. Annual Test and Inspection: One year after date of Substantial Completion, test fire-alarm system complying with visual and testing inspection requirements in NFPA 72. Use forms developed for initial tests and inspections.

## 3.07 DEMONSTRATION

A. Engage a factory-authorized service representative to train Owner's maintenance personnel to adjust, operate, and maintain fire-alarm system.

END OF SECTION

# SECTION 31 10 00

# SITE CLEARING

## PART 1 GENERAL

### 1. RELATED DOCUMENTS

a. Drawings and general provisions of the Contract, including General and Supplementary Conditions and Division 01 Specification Sections, apply to this Section.

### 2. SUMMARY

a. Section Includes:
   1) Clearing and grubbing.
   2) Stripping and stockpiling rock.
   3) Removing above- and below-grade site improvements.
   4) Disconnecting, capping or sealing, abandoning, and/or removing site utilities.

### 3. DEFINITIONS

a. Subsoil: Soil beneath the level of subgrade; soil beneath the topsoil layers of a naturally occurring soil profile, typified by less than 1 percent organic matter and few soil organisms.

b. Surface Soil: Soil that is present at the top layer of the existing soil profile. In undisturbed areas, surface soil is typically called "topsoil," but in disturbed areas such as urban environments, the surface soil can be subsoil.

c. Topsoil: Top layer of the soil profile consisting of existing native surface topsoil or existing in-place surface soil; the zone where plant roots grow.

### 4. PRECONSTRUCTION MEETINGS

a. Preconstruction Conference: Conduct conference at the following locations at least 48 hours prior to commencing site clearing and removals.

   1) Sunset Maintenance Facility
      5165 West Sunset Road
      Las Vegas, NV 89119

   2) Integrated Bus Maintenance Facility
      3210 Citizen Avenue
      Las Vegas, NV 89032

5. MATERIAL OWNERSHIP

a. Except for materials indicated to be stockpiled or otherwise remain Owner's property, cleared materials shall become Contractor's property and shall be removed from Project site.

6. INFORMATIONAL SUBMITTALS

a. Existing Conditions: Documentation of existing trees and plantings, adjoining construction, and site improvements that establishes preconstruction conditions that might be misconstrued as damage caused by site clearing.

1) Use sufficiently detailed photographs or video recordings.

b. Record Drawings: Identifying and accurately showing locations of capped utilities and other subsurface structural, electrical, and mechanical conditions.

7. FIELD CONDITIONS

a. Traffic: Minimize interference with adjoining roads, streets, walks, and other adjacent occupied or used facilities during site-clearing operations.

1) Do not close or obstruct streets, walks, or other adjacent occupied or used facilities without permission from Owner and authorities having jurisdiction.
2) Provide alternate routes around closed or obstructed traffic ways if required by Owner or authorities having jurisdiction.

b. Salvageable Improvements: Carefully remove items indicated to be salvaged and store on Owner's premises where indicated.

c. Utility Locator Service: Notify Call Before You Dig (1-800-227-2600), FAST (1-702-432-5300) and Call Before you Overhead (1-702-227-2929) before site clearing.

d. Do not commence site clearing operations until temporary erosion- and sedimentation-control measures are in place.

PART 2 PRODUCTS

1. MATERIALS

a. Satisfactory Soil Material: Requirements for satisfactory soil material are specified in Section 312000 "Earth Moving."

1) Obtain approved borrow soil material off-site when satisfactory soil material is not available on-site.

## PART 3 EXECUTION

1. PREPARATION

   a. Protect and maintain benchmarks and survey control points from disturbance during construction.

   b. Protect existing site improvements to remain from damage during construction.

      1) Restore damaged improvements to their original condition, as acceptable to Owner.

2. EXISTING UTILITIES

   a. Locate, identify, disconnect, and seal or cap utilities indicated to be removed or abandoned in place.

      1) Arrange with utility companies to shut off indicated utilities.

   b. Locate, identify, and disconnect utilities indicated to be abandoned in place.

   c. Interrupting Existing Utilities: Do not interrupt utilities serving facilities occupied by Owner or others, unless permitted under the following conditions and then only after arranging to provide temporary utility services according to requirements indicated:

      1) Notify Owner in advance of proposed utility interruptions. Consult with Owner to determine advanced notification requirements.
      2) Do not proceed with utility interruptions without Owner's written permission.

3. Excavate for and remove underground utilities indicated to be removed.

4. CLEARING AND GRUBBING

   a. Remove obstructions to permit installation of new construction.

   b. Fill depressions caused by clearing and grubbing operations with satisfactory soil material unless further excavation or earthwork is indicated.

      1) Place fill material in horizontal layers not exceeding a loose depth of 8 inches and compact each layer to a density equal to adjacent original ground.

5. STOCKPILING ROCK

   a. Remove from area indicated on Drawings the existing landscape rock surface.

      1) Separate or wash off non-rock materials from rocks, including soil, clay lumps, gravel, and other objects larger than 4 inches in diameter; trash, debris, weeds, roots, and other waste materials.

b. Stockpile rock away from edge of excavations without intermixing with other materials. Cover to prevent windblown debris from accumulating among rocks.
   1) Stockpile surplus rock to allow later use by the Owner.

6. SITE IMPROVEMENTS

a. Remove existing above- and below-grade improvements as indicated and necessary to facilitate new construction.

b. Remove slabs, paving, curbs, gutters, and aggregate base as indicated.

   1) Unless existing full-depth joints coincide with line of demolition, neatly saw-cut along line of existing pavement to remain before removing adjacent existing pavement. Saw-cut faces vertically.
   2) Paint cut ends of steel reinforcement in concrete to remain with two coats of antirust coating, following coating manufacturer's written instructions. Keep paint off surfaces that will remain exposed.

7. DISPOSAL OF SURPLUS AND WASTE MATERIALS

a. Remove surplus soil material, demolished materials, and waste materials including trash and debris, and legally dispose of them off Owner's property.

END OF SECTION 31 10 00

# SECTION 31 20 00

# EARTH MOVING

## PART 1 GENERAL

### 1. RELATED DOCUMENTS

a. Drawings and general provisions of the Contract, including General and Supplementary Conditions and Division 01 Specification Sections, apply to this Section.

### 2. SUMMARY

a. Section Includes:

1) Excavating and filling for rough grading the Site.
2) Preparing subgrades for slabs-on-grade, walls and pavements.
3) Subbase course for slabs-on-grade, walls and pavements.
4) Subbase course for asphalt paving.
5) Excavating and backfilling trenches for utilities and pits for buried utility structures.

b. Related Requirements:
1) Section 033000 "Cast-in-Place Concrete" for granular course if placed over vapor retarder and beneath the slab-on-grade.
2) Section 311000 "Site Clearing" for stripping and stockpiling landscape rock, and removal of above- and below-grade improvements and utilities.

### 3. DEFINITIONS

a. Backfill: Soil material or controlled low-strength material used to fill an excavation.

1) Initial Backfill: Backfill placed beside and over pipe in a trench, including haunches to support sides of pipe.
2) Final Backfill: Backfill placed over initial backfill to fill a trench.

b. Bedding Course: Aggregate layer placed over the excavated subgrade in a trench before laying pipe.

c. Borrow Soil: Satisfactory soil imported from off-site for use as fill or backfill.

d. Excavation: Removal of material encountered above subgrade elevations and to lines and dimensions indicated.

1) Authorized Additional Excavation: Excavation below subgrade elevations or beyond indicated lines and dimensions as directed by Architect. Authorized

additional excavation and replacement material will be paid for according to Contract provisions for changes in the Work.

2) Unauthorized Excavation: Excavation below subgrade elevations or beyond indicated lines and dimensions without direction by Architect. Unauthorized excavation, as well as remedial work directed by Architect, shall be without additional compensation.

e. Rock: Rock material in beds, ledges, unstratified masses, conglomerate deposits, and boulders of rock material that exceed 3/4 cu. yd for footing, trench, and pit excavation that cannot be removed by rock-excavating equipment equivalent to the following in size and performance ratings, without systematic drilling, ram hammering, ripping, or blasting, when permitted:

1) Equipment for Footing, Trench, and Pit Excavation: Late-model, track-mounted hydraulic excavator; equipped with a 42-inch- maximum-width, short-tip-radius rock bucket; rated at not less than 138-hp flywheel power with bucket-curling force of not less than 28,700 lbf and stick-crowd force of not less than 18,400 lbf with extra-long reach boom.

f. Structures: Buildings, footings, foundations, retaining walls, slabs, tanks, curbs, mechanical and electrical appurtenances, or other man-made stationary features constructed above or below the ground surface.

g. Structural Fill: Soil materials used to raise existing grades.

h. Subbase Course: Aggregate layer placed between the subgrade and hot-mix asphalt pavement, or aggregate layer placed between the subgrade and a cement concrete pavement or a cement concrete or hot-mix asphalt walk.

i. Subgrade: Uppermost surface of an excavation or the top surface of a fill or backfill immediately below subbase, drainage fill, drainage course, or topsoil materials.

j. Utilities: On-site underground pipes, conduits, ducts, and cables as well as underground services within buildings.

4. ACTION SUBMITTALS

a. Product Data: For each type of the following manufactured products required:
1) Controlled low-strength material, including design mixture.
2) Warning tapes.

5. INFORMATIONAL SUBMITTALS

a. Qualification Data: For qualified testing agency.

b. Material Test Reports: For each borrow soil material proposed for aggregate base, fill and backfill as follows:

1) Classification according to ASTM D 2487.

2) Laboratory compaction curve according to ASTM D 1557.

c. Preexcavation Photographs or Videotape: Show existing conditions of adjoining construction and site improvements, including finish surfaces that might be misconstrued as damage caused by earth-moving operations. Submit before earth moving begins.

6. QUALITY ASSURANCE

a. Geotechnical Testing Agency Qualifications: Qualified according to ASTM E 329 and ASTM D 3740 for testing indicated.

7. FIELD CONDITIONS

a. Traffic: Minimize interference with adjoining roads, streets, walks, and other adjacent occupied or used facilities during earth-moving operations.

1) Do not close or obstruct streets, walks, or other adjacent occupied or used facilities without permission from Owner and authorities having jurisdiction.
2) Provide alternate routes around closed or obstructed traffic ways if required by Owner or authorities having jurisdiction.

b. Do not commence earth-moving operations until temporary site fencing and erosion- and sedimentation-control measures are in place.

PART 2 PRODUCTS

1. SOIL MATERIALS

a. General: Provide borrow soil materials when sufficient satisfactory soil materials are not available from excavations.

b. Aggregate Base Courses Type 1 and Type II: Conforming to Uniform Standard Specifications for Public Works' Construction Off-Site Improvements, Clark County Area, Nevada, latest edition and Clark County Public Works Supplements.

c. Structural Fill: Soil conforming to Uniform Standard Specifications for Public Works' Construction Off-Site Improvements, Clark County Area, Nevada, latest edition and Clark County Public Works Supplements for backfill.

2. CONTROLLED LOW-STRENGTH MATERIAL

a. Controlled Low-Strength Material: Self-compacting, flowable concrete material produced from the following:

1) Portland Cement: ASTM C 150/C 150M, Type V.
2) Fly Ash: ASTM C 618, Class C or F.

3) Normal-Weight Aggregate: ASTM C 33/C 33M, 3/8-inch nominal maximum aggregate size.
4) Air-Entraining Admixture: ASTM C 260/C 260M.

b. Produce conventional-weight, controlled low-strength material with 150 psi compressive strength when tested according to ASTM C 495/C 495M.

3. ACCESSORIES

a. Detectable Warning Tape: Acid- and alkali-resistant, polyethylene film warning tape manufactured for marking and identifying underground utilities, a minimum of 3 inches wide and 4 mils thick, continuously inscribed with a description of the utility, with metallic core encased in a protective jacket for corrosion protection, detectable by metal detector when tape is buried up to 30 inches deep; colored as follows:

1) Red: Electric.
2) Yellow: Gas, oil, steam, and dangerous materials.
3) Orange: Telephone and other communications.
4) Blue: Water systems.
5) Green: Sewer systems.

PART 3 EXECUTION

1. PREPARATION

a. Protect structures, utilities, sidewalks, pavements, and other facilities from damage caused by settlement, lateral movement, undermining, washout, and other hazards created by earth-moving operations.

b. Protect and maintain erosion and sedimentation controls during earth-moving operations.

2. EXCAVATION, GENERAL

a. Unclassified Excavation: Excavate to subgrade elevations regardless of the character of surface and subsurface conditions encountered. Unclassified excavated materials may include rock, soil materials, and obstructions. No changes in the Contract Sum or the Contract Time will be authorized for rock excavation or removal of obstructions.

1) If excavated materials intended for fill and backfill include unsatisfactory soil materials and rock, replace with satisfactory soil materials.
2) Remove rock to lines and grades indicated to permit installation of permanent construction without exceeding the following dimensions:

a) 24 inches outside of concrete forms other than at footings.
b) 12 inches outside of concrete forms at footings.
c) 6 inches outside of minimum required dimensions of concrete cast against grade.

d) Outside dimensions of concrete walls indicated to be cast against rock without forms or exterior waterproofing treatments.
e) 6 inches beneath bottom of concrete slabs-on-grade.
f) 4 inches beneath pipe in trenches.

3. EXCAVATION FOR STRUCTURES

a. Excavate to indicated elevations and dimensions within a tolerance of plus or minus 1 inch If applicable, extend excavations a sufficient distance from structures for placing and removing concrete formwork, for installing services and other construction, and for inspections.

1) Excavations for Footings and Foundations: Do not disturb bottom of excavation. Excavate by hand to final grade just before placing concrete reinforcement. Trim bottoms to required lines and grades to leave solid base to receive other work.
2) Excavation for Underground Tanks, Basins, and Mechanical or Electrical Utility Structures: Excavate to elevations and dimensions indicated within a tolerance of plus or minus 1 inch. Do not disturb bottom of excavations intended as bearing surfaces.

4. EXCAVATION FOR WALKS AND PAVEMENTS

a. Excavate surfaces under walks and pavements to indicated lines, cross sections, elevations, and subgrades.

5. EXCAVATION FOR UTILITY TRENCHES

a. Excavate trenches to indicated gradients, lines, depths, and elevations.

b. Excavate trenches to uniform widths to provide the following clearance on each side of pipe or conduit. Excavate trench walls vertically from trench bottom to 12 inches higher than top of pipe or conduit unless otherwise indicated.

1) Clearance: 12 inches each side of pipe or conduit unless otherwise indicated.

c. Trench Bottoms: Excavate and shape trench bottoms to provide uniform bearing and support of pipes and conduit. Shape subgrade to provide continuous support for bells, joints, and barrels of pipes and for joints, fittings, and bodies of conduits. Remove projecting stones and sharp objects along trench subgrade.

1) For pipes and conduit less than 6 inches in nominal diameter, excavate trench bottoms and support pipe and conduit on an undisturbed subgrade.
2) For pipes and conduit 6 inches or larger in nominal diameter, shape bottom of trench to support bottom 90 degrees of pipe or conduit circumference. Fill depressions with tamped sand backfill.
3) For flat-bottomed, multiple-duct conduit units, excavate trench bottoms and support conduit on an undisturbed subgrade.

4) Excavate trenches 6 inches deeper than elevation required in rock or other unyielding bearing material to allow for bedding course.

d. Trench Bottoms: Excavate trenches 4 inches deeper than bottom of pipe and conduit elevations to allow for bedding course. Hand-excavate deeper for bells of pipe.

1) Excavate trenches 6 inches deeper than elevation required in rock or other unyielding bearing material to allow for bedding course.

6. SUBGRADE INSPECTION

a. Notify Architect when excavations have reached required subgrade.

b. If Architect determines that unsatisfactory soil is present, continue excavation and replace with compacted backfill or fill material as directed.

c. Authorized additional excavation and replacement material will be paid for according to Contract provisions for changes in the Work.

d. Reconstruct subgrades damaged by freezing temperatures, frost, rain, accumulated water, or construction activities, as directed by Architect, without additional compensation.

7. UNAUTHORIZED EXCAVATION

a. Fill unauthorized excavation under foundations or wall footings by extending bottom elevation of concrete foundation or footing to excavation bottom, without altering top elevation. Lean concrete fill, with 28-day compressive strength of 2500 psi, may be used when approved by Architect.

1) Fill unauthorized excavations under other construction, pipe, or conduit as directed by Architect.

8. STORAGE OF SOIL MATERIALS

a. Stockpile borrow soil materials and excavated satisfactory soil materials without intermixing. Place, grade, and shape stockpiles to drain surface water. Cover to prevent windblown dust.

1) Stockpile soil materials away from edge of excavations.

9. BACKFILL

a. Place and compact backfill in excavations promptly, but not before completing the following:

1) Construction below finish grade including, where applicable, subdrainage, dampproofing, waterproofing, and perimeter insulation.

2) Surveying locations of underground utilities for Record Documents.
3) Testing and inspecting underground utilities.
4) Removing concrete formwork.
5) Removing trash and debris.
6) Removing temporary shoring, bracing, and sheeting.
7) Installing permanent or temporary horizontal bracing on horizontally supported walls.

b. Place backfill on subgrades free of mud, frost, snow, or ice.

10. UTILITY TRENCH BACKFILL

a. Place backfill on subgrades free of mud, frost, snow, or ice.

b. Place and compact bedding course on trench bottoms and where indicated. Shape bedding course to provide continuous support for bells, joints, and barrels of pipes and for joints, fittings, and bodies of conduits.

c. Backfill voids with satisfactory soil while removing shoring and bracing.

d. Initial Backfill:

1) Soil Backfill: Place and compact initial backfill as indicated on the drawings over the pipe or conduit.

a) Carefully compact initial backfill under pipe haunches and compact evenly up on both sides and along the full length of piping or conduit to avoid damage or displacement of piping or conduit. Coordinate backfilling with utilities testing.

2) Controlled Low-Strength Material: Place initial backfill of controlled low-strength material to a height of 12 inches over the pipe or conduit. Coordinate backfilling with utilities testing.

e. Final Backfill:

1) Soil Backfill: Place and compact final backfill of satisfactory soil to final subgrade elevation.
2) Controlled Low-Strength Material: Place final backfill of controlled low-strength material to final subgrade elevation.

f. Detectable Warning Tape: Install detectable warning tape directly above utilities, 12 inches below finished grade, except 6 inches below subgrade under pavements and slabs.

11. SOIL MOISTURE CONTROL

a. Uniformly moisten or aerate subgrade and each subsequent fill or backfill soil layer before compaction to within 2 percent of optimum moisture content.

1) Do not place backfill or fill soil material on surfaces that are muddy, frozen, or contain frost or ice.
2) Remove and replace, or scarify and air dry, otherwise satisfactory soil material that exceeds optimum moisture content by 2 percent and is too wet to compact to specified dry unit weight.

12. COMPACTION OF SOIL BACKFILLS AND FILLS

a. Place backfill and fill soil materials in layers not more than 8 inches in loose depth for material compacted by heavy compaction equipment and not more than 4 inches in loose depth for material compacted by hand-operated tampers.

b. Place backfill and fill soil materials evenly on all sides of structures to required elevations and uniformly along the full length of each structure.

c. Compact soil materials to not less than the following percentages of maximum dry unit weight according to ASTM D 1557:

1) Under structures, building slabs, steps, and pavements, scarify and recompact top 12 inches of existing subgrade and each layer of backfill or fill soil material at 95 percent.
2) Under walkways, scarify and recompact top 6 inches below subgrade and compact each layer of backfill or fill soil material at 90 percent.
3) For utility trenches, compact each layer of initial and final backfill soil material at 90 percent.

13. GRADING

a. General: Uniformly grade areas to a smooth surface, free of irregular surface changes. Comply with compaction requirements and grade to cross sections, lines, and elevations indicated.

1) Provide a smooth transition between adjacent existing grades and new grades.
2) Cut out soft spots, fill low spots, and trim high spots to comply with required surface tolerances.

b. Site Rough Grading: Slope grades to direct water away from buildings and to prevent ponding. Finish subgrades to elevations required to achieve indicated finish elevations, within the following subgrade tolerances:

14. SUBBASE AND BASE COURSES UNDER PAVEMENTS AND WALKS

a. Place aggregate base course on subgrades free of mud, frost, snow, or ice.

b. On prepared subgrade, place aggregate base course under pavements and walks as follows:
1) Shape aggregate base to required elevations and cross-slope grades.

2) Place aggregate base 6 inches or less in compacted thickness in a single layer.
3) Place aggregate base that exceeds 6 inches in compacted thickness in layers of equal thickness, with no compacted layer more than 6 inches thick or less than 3 inches thick.
4) Compact aggregate base at optimum moisture content to required grades, lines, cross sections, and thickness to not less than 95 percent of maximum dry unit weight according to ASTM D 1557.

15. FIELD QUALITY CONTROL

a. Special Inspections: Contractor will engage a qualified special inspector to perform the following special inspections:

1) Determine prior to placement of fill that site has been prepared in compliance with requirements.
2) Determine that fill material classification and maximum lift thickness comply with requirements.
3) Determine, during placement and compaction, that in-place density of compacted fill complies with requirements.

b. Testing Agency: Contractor will engage a qualified geotechnical engineering testing agency to perform tests and inspections.

c. Allow testing agency to inspect and test subgrades and each fill or backfill layer. Proceed with subsequent earth moving only after test results for previously completed work comply with requirements.

d. Footing Subgrade: At footing subgrades, at least one test of each soil stratum will be performed to verify design bearing capacities. Subsequent verification and approval of other footing subgrades may be based on a visual comparison of subgrade with tested subgrade when approved by Architect.

e. Testing agency will test compaction of soils in place according to ASTM D 1556, ASTM D 2167, ASTM D 2937, and ASTM D 6938, as applicable. Tests will be performed at the following locations and frequencies:

1) Paved and Building Slab Areas: At subgrade and at each compacted fill and backfill layer, at least one test for every paved area or slab.
2) Wall Backfill: At each compacted backfill layer, at least one test for every 100 feet or less of wall length but no fewer than two tests.
3) Trench Backfill: At each compacted initial and final backfill layer, at least one test for every 150 feet or less of trench length but no fewer than two tests.

f. When testing agency reports that subgrades, fills, or backfills have not achieved degree of compaction specified, scarify and moisten or aerate, or remove and replace soil materials to depth required; recompact and retest until specified compaction is obtained.

16. PROTECTION

a. Protecting Graded Areas: Protect newly graded areas from traffic, and erosion. Keep free of trash and debris.

b. Repair and reestablish grades to specified tolerances where completed or partially completed surfaces become eroded, rutted, settled, or where they lose compaction due to subsequent construction operations or weather conditions.

1) Scarify or remove and replace soil material to depth as directed by Architect; reshape and recompact.

c. Where settling occurs before Project correction period elapses, remove finished surfacing, backfill with additional soil material, compact, and reconstruct surfacing.

1) Restore appearance, quality, and condition of finished surfacing to match adjacent work, and eliminate evidence of restoration to greatest extent possible.

17. DISPOSAL OF SURPLUS AND WASTE MATERIALS

a. Remove surplus satisfactory soil and waste materials, including unsatisfactory soil, trash, and debris, and legally dispose of them off Owner's property.

END OF SECTION 31 20 00

# SECTION 32 12 16

# ASPHALT PAVING

## PART 1 - GENERAL

### 1. RELATED DOCUMENTS

a. Drawings and general provisions of the Contract, including General and Supplementary Conditions and Division 01 Specification Sections, apply to this Section.

### 2. SUMMARY

a. Section Includes:
   1) Hot-mix asphalt patching.
   2) Hot-mix asphalt paving.
   3) Hot-mix asphalt overlay.
   4) Asphalt surface treatments.

### 3. ACTION SUBMITTALS

a. Product Data: For each type of product.

   1) Include technical data and tested physical and performance properties.
   2) Job-Mix Designs: Certification, by authorities having jurisdiction, of approval of each job mix proposed for the Work.

b. Job-Mix Designs: For each job mix proposed for the Work.

### 4. INFORMATIONAL SUBMITTALS

a. Qualification Data: For manufacturer and testing agency.

b. Material Certificates: For each paving material. Include statement that mixes containing recycled materials will perform equal to mixes produced from all new materials.

c. Material Test Reports: For each paving material, by a qualified testing agency.

d. Field quality-control reports.

### 5. QUALITY ASSURANCE

a. Manufacturer Qualifications: A paving-mix manufacturer registered with and approved by Clark County Public Works.

b. Testing Agency Qualifications: Qualified according to ASTM D 3666 for testing indicated.

c. Regulatory Requirements: Comply with materials, workmanship, and other applicable requirements of *Uniform Standard Drawings for Public Works Construction, Offsite Improvements, Clark County Area, Nevada (USD)* and *Uniform Standard Specifications for Public Works Construction Off-Site Improvements, Clark County Area, Nevada* (USS) for asphalt paving work.

1) Measurement and payment provisions and safety program submittals included in standard specifications do not apply to this Section.

6. FIELD CONDITIONS

a. Environmental Limitations: Do not apply asphalt materials if subgrade is wet or excessively damp, if rain is imminent or expected before time required for adequate cure, or if the following conditions are not met:

1) Prime Coat: Minimum surface temperature of 50 deg F.
2) Tack Coat: Minimum surface temperature of 60 deg F.
3) Slurry Coat: Comply with weather limitations in ASTM D 3910.
4) Asphalt Base Course: Minimum surface temperature of 40 deg F and rising at time of placement.
5) Asphalt Surface Course: Minimum surface temperature of 60 deg F at time of placement.

PART 2 - PRODUCTS

1. AGGREGATES

a. General: Use materials and gradations that have performed satisfactorily in previous installations.

b. Coarse Aggregate: ASTM D 692, sound; angular crushed stone, crushed gravel, or cured, crushed blast-furnace slag.

c. Fine Aggregate: ASTM D 1073, sharp-edged natural sand or sand prepared from stone, gravel, cured blast-furnace slag, or combinations thereof.

1) For hot-mix asphalt, limit natural sand to a maximum of 20 percent by weight of the total aggregate mass.

d. Mineral Filler: ASTM D 242, rock or slag dust, hydraulic cement, or other inert material.

2. ASPHALT MATERIALS

a. Asphalt Binder: AASHTO M 320, PG 64-22.

b. Asphalt Cement: ASTM D 3381for viscosity-graded material and ASTM D 946 for penetration-graded material.

c. Cutback Prime Coat: ASTM D 2027, medium-curing cutback asphalt, MC-30 or MC-70 for closed-textured surfaces and MC-250 for open-textured surfaces.

d. Emulsified Asphalt Prime Coat: ASTM D 977 emulsified asphalt, or ASTM D 2397 or cationic emulsified asphalt, slow setting, diluted in water, of suitable grade and consistency for application.

e. Tack Coat: ASTM D 977 emulsified asphalt, or ASTM D 2397 cationic emulsified asphalt, slow setting, diluted in water, of suitable grade and consistency for application.

f. Fog Seal: ASTM D 977 emulsified asphalt, or ASTM D 2397 cationic emulsified asphalt, slow setting, factory diluted in water, of suitable grade and consistency for application.

g. Water: Potable.

h. Undersealing Asphalt: ASTM D 3141; pumping consistency.

3. AUXILIARY MATERIALS

a. Recycled Materials for Hot-Mix Asphalt Mixes: Reclaimed asphalt pavement; reclaimed, unbound-aggregate base material; and recycled tires asphalt shingles or glass from sources and gradations that have performed satisfactorily in previous installations, equal to performance of required hot-mix asphalt paving produced from all new materials.

b. Sand: ASTM D 1073, Grade No. 2 or No. 3.

c. Joint Sealant: ASTM D 6690, Type I, hot-applied, single-component, polymer-modified bituminous sealant.

4. MIXES

a. Recycled Content of Hot-Mix Asphalt: Postconsumer recycled content plus one-half of preconsumer recycled content not less than 10 percent or more than 15 percent by weight.

1) Surface Course Limit: Recycled content no more than 10 percent by weight.

b. Hot-Mix Asphalt: Dense-graded, hot-laid, hot-mix asphalt plant mixes, Traffic Category II, from an approved Clark County Public Works supplier.

c. Emulsified-Asphalt Slurry: ASTM D 3910, Type 1.

## PART 3 - EXECUTION

### 1. EXAMINATION

a. Verify that subgrade is dry and in suitable condition to begin paving.

b. Proof-roll subgrade below pavements with heavy pneumatic-tired equipment to identify soft pockets and areas of excess yielding. Do not proof-roll wet or saturated subgrades.

1) Completely proof-roll subgrade in one direction. Limit vehicle speed to 3 mph.
2) Proof roll with a loaded 10-wheel, tandem-axle dump truck weighing not less than 15 +tons.
3) Excavate soft spots, unsatisfactory soils, and areas of excessive pumping or rutting, as determined by Architect, and replace with compacted backfill or fill as directed.

c. Proceed with paving only after unsatisfactory conditions have been corrected.

### 2. SURFACE PREPARATION

a. General: Immediately before placing asphalt materials, remove loose and deleterious material from substrate surfaces. Ensure that prepared subgrade is ready to receive paving.

b. Herbicide Treatment: Apply herbicide according to manufacturer's recommended rates and written application instructions. Apply to dry, prepared subgrade or surface of compacted-aggregate base before applying paving materials.

1) Mix herbicide with prime coat if formulated by manufacturer for that purpose.

c. Cutback Prime Coat: Apply uniformly over surface of compacted unbound-aggregate base course at a rate of 0.15 to 0.50 gal./sq. yd. Apply enough material to penetrate and seal, but not flood, surface. Allow prime coat to cure.

1) If prime coat is not entirely absorbed within 24 hours after application, spread sand over surface to blot excess asphalt. Use enough sand to prevent pickup under traffic. Remove loose sand by sweeping before pavement is placed and after volatiles have evaporated.
2) Protect primed substrate from damage until ready to receive paving.

d. Emulsified Asphalt Prime Coat: Apply uniformly over surface of compacted unbound-aggregate base course at a rate of 0.10 to 0.30 gal./sq. yd. per inch depth. Apply enough material to penetrate and seal, but not flood, surface. Allow prime coat to cure.

1) If prime coat is not entirely absorbed within 24 hours after application, spread sand over surface to blot excess asphalt. Use enough sand to prevent pickup under traffic. Remove loose sand by sweeping before pavement is placed and after volatiles have evaporated.

2) Protect primed substrate from damage until ready to receive paving.

e. Tack Coat: Apply uniformly to surfaces of existing pavement at a rate of 0.05 to 0.15 gal./sq. yd.

1) Allow tack coat to cure undisturbed before applying hot-mix asphalt paving.
2) Avoid smearing or staining adjoining surfaces, appurtenances, and surroundings. Remove spillages and clean affected surfaces.

3. PLACING HOT-MIX ASPHALT

a. Machine place hot-mix asphalt on prepared surface, spread uniformly, and strike off. Place asphalt mix by hand in areas inaccessible to equipment in a manner that prevents segregation of mix. Place each course to required grade, cross section, and thickness when compacted.

1) Place hot-mix asphalt base course in number of lifts and thicknesses indicated.
2) Place hot-mix asphalt surface course in single lift.
3) Spread mix at a minimum temperature of 250 deg F.
4) Begin applying mix along centerline of crown for crowned sections and on high side of one-way slopes unless otherwise indicated.
5) Regulate paver machine speed to obtain smooth, continuous surface free of pulls and tears in asphalt-paving mat.

b. Place paving in consecutive strips not less than 10 feet wide unless infill edge strips of a lesser width are required.

1) After first strip has been placed and rolled, place succeeding strips and extend rolling to overlap previous strips. Overlap mix placement about 1 to 1-1/2 inches from strip to strip to ensure proper compaction of mix along longitudinal joints.
2) Complete a section of asphalt base course before placing asphalt surface course.

c. Promptly correct surface irregularities in paving course behind paver. Use suitable hand tools to remove excess material forming high spots. Fill depressions with hot-mix asphalt to prevent segregation of mix; use suitable hand tools to smooth surface.

4. JOINTS

a. Construct joints to ensure a continuous bond between adjoining paving sections. Construct joints free of depressions, with same texture and smoothness as other sections of hot-mix asphalt course.

1) Clean contact surfaces and apply tack coat to joints.
2) Offset longitudinal joints, in successive courses, a minimum of 6 inches.
3) Offset transverse joints, in successive courses, a minimum of 24 inches.
4) Construct transverse joints at each point where paver ends a day's work and resumes work at a subsequent time. Construct these joints using either

"bulkhead" or "papered" method according to AI MS-22, for both "Ending a Lane" and "Resumption of Paving Operations."

5) Compact joints as soon as hot-mix asphalt will bear roller weight without excessive displacement.

6) Compact asphalt at joints to a density within 2 percent of specified course density.

5. COMPACTION

a. General: Begin compaction as soon as placed hot-mix paving will bear roller weight without excessive displacement. Compact hot-mix paving with hot, hand tampers or with vibratory-plate compactors in areas inaccessible to rollers.

1) Complete compaction before mix temperature cools to 185 deg F.

b. Breakdown Rolling: Complete breakdown or initial rolling immediately after rolling joints and outside edge. Examine surface immediately after breakdown rolling for indicated crown, grade, and smoothness. Correct laydown and rolling operations to comply with requirements.

c. Intermediate Rolling: Begin intermediate rolling immediately after breakdown rolling while hot-mix asphalt is still hot enough to achieve specified density. Continue rolling until hot-mix asphalt course has been uniformly compacted to the following density:

1) Average Density: 96 percent of reference laboratory density according to ASTM D 6927, but not less than 94 percent or greater than 100 percent.

2) Average Density: 92 percent of reference maximum theoretical density according to ASTM D 2041, but not less than 90 percent or greater than 96 percent.

d. Finish Rolling: Finish roll paved surfaces to remove roller marks while hot-mix asphalt is still warm.

e. Edge Shaping: While surface is being compacted and finished, trim edges of pavement to proper alignment. Bevel edges while asphalt is still hot; compact thoroughly.

f. Repairs: Remove paved areas that are defective or contaminated with foreign materials and replace with fresh, hot-mix asphalt. Compact by rolling to specified density and surface smoothness.

g. Protection: After final rolling, do not permit vehicular traffic on pavement until it has cooled and hardened.

h. Erect barricades to protect paving from traffic until mixture has cooled enough not to become marked.

6. INSTALLATION TOLERANCES

a. Pavement Thickness: Compact each course to produce the thickness indicated within the following tolerances:

1) Base Course: Plus or minus 1/2 inch.
2) Surface Course: Plus 1/4 inch, no minus.

b. Pavement Surface Smoothness: Compact each course to produce a surface smoothness within the following tolerances as determined by using a 10-foot straightedge applied transversely or longitudinally to paved areas:

1) Base Course: 1/4 inch.
2) Surface Course: 1/8 inch.
3) Crowned Surfaces: Test with crowned template centered and at right angle to crown. Maximum allowable variance from template is 1/4 inch.

7. SURFACE TREATMENTS

a. Fog Seals: Apply fog seal at a rate of 0.10 to 0.15 gal./sq. yd. to existing asphalt pavement and allow to cure. With fine sand, lightly dust areas receiving excess fog seal.

b. Slurry Seals: Apply slurry coat in a uniform thickness according to ASTM D 3910 and allow to cure.

1) Roll slurry seal to remove ridges and provide a uniform, smooth surface.

8. FIELD QUALITY CONTROL

a. Testing Agency: Engage a qualified testing agency to perform tests and inspections.

b. Thickness: In-place compacted thickness of hot-mix asphalt courses will be determined according to ASTM D 3549.

c. Surface Smoothness: Finished surface of each hot-mix asphalt course will be tested for compliance with smoothness tolerances.

d. In-Place Density: Testing agency will take samples of uncompacted paving mixtures and compacted pavement according to ASTM D 979.

1) Reference maximum theoretical density will be determined by averaging results from four samples of hot-mix asphalt-paving mixture delivered daily to site, prepared according to ASTM D 2041, and compacted according to job-mix specifications.
2) In-place density of compacted pavement will be determined by testing core samples according to ASTM D 1188 or ASTM D 2726.

a) One core sample will be taken for every 1000 sq. yd. or less of installed pavement, with no fewer than three cores taken.
b) Field density of in-place compacted pavement may also be determined by nuclear method according to ASTM D 2950 and correlated with ASTM D 1188 or ASTM D 2726.

e. Replace and compact hot-mix asphalt where core tests were taken.

f. Remove and replace or install additional hot-mix asphalt where test results or measurements indicate that it does not comply with specified requirements.

9. WASTE HANDLING

a. General: Handle asphalt-paving waste according to policies, procedures and requirements of the Owner and jurisdiction having authority issuing permits.

END OF SECTION 32 12 16

# SECTION 323100 - ELECTRIC GATE OPERATORS

## PART 1 GENERAL

### 1.1 SECTION INCLUDES

A. Electric Gate Operators:
   1. Heavy-duty, industrial, gear-driven slide gate operators (LiftMaster Model SL585).
      Operator for a cantilever system shall be confirmed by LiftMaster and provided where required by site conditions.

B. Monitored Photo Eyes
   1. Monitored Retro-Reflective Photo Eyes (LiftMaster Model LMRRUL)
   2. Monitored Through-Beam Photo Eyes (LiftMaster Model LMTBUL)

### 1.2 RELATED SECTIONS

A. Section - 323119 - Fences and Gates: Adjoining fences and gates.

B. Section - 033000 - Cast-in-Place Concrete: Concrete mounting pads.

C. Division 26 - Requirements for electrical connections.

### 1.3 REFERENCES

A. National Electrical Manufacturers Association (NEMA): NEMA ICS 6 - Industrial Control and Systems: Enclosures.

B. Underwriters Laboratories (UL): UL 325 - Standard for Safety for Door, Drapery, Gate, Louver, and Window Operators and Systems.

C. Underwriters Laboratories (UL): UL 991 - Standard for Tests for Safety-Related Controls Employing Solid-State Devices.

D. International Organization for Standardization: ISO 9001 - Quality Management Systems.

### 1.4 SUBMITTALS

A. See Section 01 31 00 – Project Management & Coordination: 1.5 Submittals & as noted in this specification section.

B. Product Data: Equipment list, system description, electrical wiring diagrams for installation, and manufacturer's data sheets on each product to be used, including:
   1. Preparation instructions and recommendations.
   2. Storage and handling requirements and recommendations.
   3. Installation methods.

C. Shop Drawings: Submit shop drawings showing layout, profiles, and product components, including anchorage, edge conditions, and accessories.
   1. Operation, installation, and maintenance manuals including wiring diagrams.
   2. Risers, layouts, and special wiring diagrams showing any changes to standard drawings.

1.5 DELIVERY, STORAGE, AND HANDLING

A. Deliver, store, and handle materials and products in strict compliance with manufacturer's instructions and industry standards.

B. Store products indoors in manufacturer's original containers and packaging, with labels clearly identifying product name and manufacturer. Protect from damage.

1.6 QUALITY ASSURANCE

A. Manufacturer Qualifications: ISO 9001 Certified Manufacturer.

B. Installer Qualifications: Installation performed by factory authorized contractor specifically trained in gate operation systems of the type found within this section.
   1. Provide documentation of maintenance and repair service availability for emergency conditions.
   2. Provide quarterly maintenance for one year following Substantial Completion of the Project.

1.7 WARRANTY

A. Manufacturer's Standard Limited Warranty:
   1. Warranty Period: 2 years.

PART 2 PRODUCTS

2.1 MANUFACTURERS

A. Acceptable Manufacturer: LiftMaster; 300 Windsor Drive; Oak Brook, IL 60523. ASD. Toll-Free: 800.282.6225. Email: specs@LiftMaster.com. Web: LiftMaster.com.

B. Substitutions: Permitted however must meet the quality of the basis of design.

C. Requests for substitutions will be considered in accordance with provisions of Section 01600.

2.2 GATE OPERATORS

A. Gate Operators: LiftMaster SL585 Industrial Gear-Driven Slide Gate Operator.
   1. Compliance: UL Listed. Compliant to the UL 325, UL 991 and CSA C22.2 No. 247 standards. Options shall be determined by RTC Representative.
      a. This model is intended for use in Class I, II, III and IV vehicular slide gate applications.

2. Monitored Safety Inputs: 3 inputs per board (main board and expansion board) totaling 6 inputs with any combination of up to:
   a. Main Board:
      1) 1 Monitored Close Photo Eye input
      2) 1 Monitored Open Photo Eye input
      3) 1 Monitored Open Safety Edge or Open Photo Eye input
   b. Expansion Board
      1) 2 Monitored Safety Edge or Photo Eye inputs (selectable for Open or Close).
      2) 1 Monitored Photo Eye input (selectable for Open or Close).
   c. 8 Monitored edges available when Transceiver is added.
3. Warranty: 2 years.
4. Operator Speed: 11 inches (279.4 mm) per second.
5. Electrical Power Requirements:
   a. 115/208/230V AC, single phase, 60 Hz.
   b. 208/230/460/575V AC, 3-phase, 60 Hz.
6. Accessory Electrical Power Requirements: 24V AC.
   a. Main Board: 12V AC, maximum 500mA.
   b. Terminal Strip:
      1) 2.2A maximum for 115/208-230V AC, single phase.
      2) 2.2A maximum for 208/230-460 V AC, three phase
      3) 1.3A maximum for 575V AC, three phase
7. Gear Reduction: 20:1 wormgear reducer in synthetic oil bath.
8. Motor: Switchless ½ HP, continuous duty
   a. Capacity: Supports gate lengths up to 45 feet (13 m) and gate weights up to 1,000 pounds(454 kg).
   b. Recommended Cycles per Hour: 20.
9. Motor: Switchless 1 HP, continuous duty.
   a. Capacity: Supports gate lengths up to 70 feet (21 m) and gate weights up to 1,600 pounds (725 kg).
   b. Recommended Cycles per Hour: 20.
10. Motor: Switchless 1 ½ HP, continuous duty (115/230V, single phase only).
    a. Capacity: Supports gate lengths up to 75 feet (23 m) and gate weights up to 1,900 pounds (862 kg).
    b. Recommended Cycles per Hour: 20.
11. Metal Frame: 7 gauge pre-galvanized steel.
12. Chassis: Powder-coated galvanized steel.
13. Enclosure: Weather-resistant, lockable, 16-gauge steel cover.
14. Chain: #50 nickel-plated, 25 feet (7620 mm) supplied with each unit.
15. Gearbox: All-weather.
16. Internet Connectivity: MyQ Technology.
    a. 902 to 928 MHz
    b. 50-channel FHSS (Frequency Hopping Spread Spectrum).
    c. LiftMaster 828LM Internet Gateway enables monitoring and control of gate operators via internet-enabled smartphone, tablet or computer
    d. Provides two-way communication between gate operator and MyQ accessories to enable remote open, close and monitoring of gate.
17. Receiver:
    a. Security+ 2.0 3-channel on-board radio receiver, holds up to 50 remote controls (unlimited with use of 811LM/813LM), HomeLink compatible
    b. Transmits 310 MHz, 315MHz, 390 MHz
18. Inherent Reversing Sensor: Utilizes Current Sense and RPM Sensor to detect obstructions or increased loads. Reverses gate when closing or stops/reverses the gate when opening.

19. Lockout/Tagout: Prevents power from being switched on when servicing operator. Safeguards workers from high voltage power.
20. Wireless Dual-Gate Operation:
    a. Built-in wireless communication will operate primary and secondary operator without having to run a communication wire.
    b. Support for through-beam photo eye in the wireless dual-gate setup. Can attach emitter and receiver to each operator, eliminating the communication wire between them.
21. LED Diagnostic Display: Simplifies installation and troubleshooting.
22. Colored Terminal Blocks: Provides easy identification of safety and fire department inputs.
23. Programmable Auxiliary Relays: 2 programmable relays with 6 settings each.
    a. Pre-warning or gate-in motion sounder
    b. Switch on/off devices at open or Close Limits or while gate is in motion.
    c. Tamper detection if gate is pushed off Close Limit
    d. Cycle quantity feedback.
    e. Red/Green Light to control gate traffic.
24. Quick Close, Anti-Tailgate: Quickly secures property, preventing unauthorized access.
25. Sequenced Access Management: Capable of sequentially controlling the operator in tandem with a barrier gate.
26. Surge/Lightning Protection: Industrial Surge Protection on high and low voltage inputs. Protects against lightning strikes at a 50-foot (15.2m) radius.
27. Plug-in Loop Detector Inputs: Programmed inputs for shadow, interrupt and exit.
28. External Alarm Reset Button: Allows for quick reset of the gate operator when the alarm has been activated.
29. Warning Device: UL 325 compliant entrapment warning alarm has ability to be set for pre-operation warning; provides a 3-second warning prior to and during gate movement.
30. Maximum Run Timer: Protects against damage to the gate and operator by limiting the unit's runt time to 120 seconds.
31. Lockable External Manual Disconnect: Allows gate to be opened in the event of a power loss without removing the operator cover.
32. Mechanical Braking: the mechanical braking system adds substantial gate position control at all points in travel. The solenoid-actuated b rake system also prevents the gate from being back-driven
33. Friction Clutch: Adjustable friction clutch helps protect gate and operator from damage should the gate meet an obstruction.
34. Limit Settings: Driven limit nut switches are fully adjustable to provide precision, accuracy and reliability.
35. Universal Footprint: Easily adapts operator to common footprints. Simplifies retrofit applications by adapting to pre-existing pads for Link, Stanley or LiftMaster operators.
36. Operating Temperature Range:
    a. Without heater: -4 degrees F (-20 degrees C) to 140 degrees F (60 degrees C).
37. MyQ Enabled Accessories:
    a. LiftMaster 828LM Internet Gateway: Allows remote monitoring from internet-enabled computer, tablet or smartphone.

b. LiftMaster 829LM Garage and Gate Monitor: Allows remote monitoring and operation.
c. LiftMaster 823LM Remote Light Switch: Controls light remotely
d. LiftMaster 825LM Remote Light Control: Allows remote monitoring and operation.

38. Accessories: Safety Monitoring Devices to be selected by RTC:
    a. Monitored Photo Eyes and Wireless Edge Kits.
        1) LiftMaster LMRRUL Reflective Photo Eyes.
        2) LiftMaster LMTBUL Thru-Beam Photo Eyes.
        3) LiftMaster LMWEKITU Wireless Edge Kith with Transmitter and Receiver.
        4) LiftMaster LMWETXU Wireless Edge Transceiver
    b. Wired Monitored Edges (all require use of LMWEKITU)
        1) LiftMaster S50 Small Profile Monitored Edge
        2) LiftMaster L50 Large Profile Monitored Edge
        3) LiftMaster WS4 Wrap-Around 4 foot (1219 mm) square monitored edge
        4) LiftMaster WS5 Wrap-Around 5 foot (1524 mm) square monitored edge
        5) LiftMaster WS6 Wrap-Around 6 foot (1829 mm) square monitored edge
        6) LiftMaster WR4 Wrap-Around 4 foot (1219 mm) square monitored edge
        7) LiftMaster WR5 Wrap-Around 5 foot (1524 mm) square monitored edge
        8) LiftMaster WR6 Wrap-Around 6 foot (1829 mm) square monitored edge
39. Accessories: Review options with RTC Representative and use requirements.
    a. LiftMaster LOOPDETLM Plug-in Loop Detector
    b. LiftMaster KPW250 – Wireless Commercial Keypad
    c. LiftMaster 892LT 2-Button Security+ 2.0 Learning Remote Control
    d. LiftMaster 894LT 4-Button Security+ 2.0 Learning Remote Control
    e. LiftMaster 811LM 1-Button Encrypted DIP Remote Control
    f. LiftMaster 813LM 3-Button Encrypted DIP Remote Control
    g. LiftMaster IPAC – Internet Protocol Access Control Entry System
    h. LiftMaster EL2000SS Stainless Steel Commercial
    i. LiftMaster Star1000 Commercial Access Control Receiver
    j. LiftMaster PPWR Passport Receiver with Security+ 2.0 Technology
    k. LiftMaster PPV1 Passport 1-Button Remote
    l. LiftMaster PPK1 Passport 1-Button Mini Remote
    m. LiftMaster KPR2000 Single Access Remote Control Keypad and Proximity Reader

## PART 3 EXECUTION

### 3.1 EXAMINATION AND PREPARATION

A. Inspect and prepare substrates using the methods recommended by the manufacturer for achieving best result for the substrates under project conditions.

B. Do not proceed with installation until substrates have been prepared using the methods recommended by the manufacturer and deviations from manufacturer's recommended tolerances are corrected. Commencement of installation constitutes acceptance of conditions.

C. If preparation is the responsibility of another installer, notify Architect in writing of deviations from manufacturer's recommended installation tolerances and conditions.

## 3.2 INSTALLATION

A. Install in accordance with manufacturer's instructions. Test for proper operation and adjust until satisfactory results are obtained.

## 3.3 PROTECTION

A. Protect installed products until completion of project.

B. Touch-up, repair or replace damaged products before Substantial Completion.

END OF SECTION

# SECTION 323119
# DECORATIVE METAL SECURITY FENCES AND GATES

## PART 1 GENERAL

### 1.1 WORK INCLUDED

The contractor shall provide all labor, materials and appurtenances necessary for installation of the steel corrugated pale security fence system defined on the drawings and at both sites. Sunset Maintenance Facility and Integrated Bus Maintenance Facility.

### 1.2 RELATED WORK

A. Earthwork

B. Concrete

### 1.3 SYSTEM DESCRIPTION

The manufacturer shall supply a total steel ornamental pale high security fence system of the Ameristar® Impasse II Anti-Scale® Gauntlet design, or approved equal. The system shall include all components (i.e., pales, rails, posts, gates and hardware) required for the complete operation of the security gate system, (rolling or cantilever) as dictated by the site conditions.

### 1.4 QUALITY ASSURANCE

The contractor shall provide laborers and supervisors who are thoroughly familiar with the type of construction involved and materials and techniques specified.

### 1.5 REFERENCES

- ASTM A653/A653M - Standard Specification for Steel Sheet, Zinc-Coated (Galvanized) or Zinc-Iron Alloy Coated (Galvannealed) by the Hot-Dip Process.
- ASTM B117 - Practice for Operating Salt-Spray (Fog) Apparatus.
- ASTM D523 - Test Method for Specular Gloss.
- ASTM D714 - Test Method for Evaluating Degree of Blistering in Paint.
- ASTM D822 - Practice for Conducting Tests on Paint and Related Coatings and Materials using Filtered Open-Flame Carbon-Arc Light and Water Exposure Apparatus.
- ASTM D1654 - Test Method for Evaluation of Painted or Coated Specimens Subjected to Corrosive Environments.
- ASTM D2244 - Test Method for Calculation of Color Differences from Instrumentally Measured Color Coordinates.
- ASTM D2794 - Test Method for Resistance of Organic Coatings to the Effects of Rapid Deformation (Impact).
- ASTM D3359 - Test Method for Measuring Adhesion by Tape Test.
- ASTM F2408 – Ornamental Fences Employing Galvanized Steel Tubular Pickets.

### 1.6 SUBMITTAL

The manufacturer's submittal package shall be provided prior to installation.

1.7 PRODUCT HANDLING AND STORAGE

Upon receipt at the job site, all materials shall be checked to ensure that no damage occurred during shipping or handling. Materials shall be stored in such a manner to ensure proper ventilation and drainage, and to protect against damage, weather, vandalism and theft.

1.8 PRODUCT WARRANTY

A. All structural fence components (i.e. rails, pickets, and posts) shall be warranted within specified limitations, by the manufacturer for a period of 15 years from date of original purchase. Warranty shall cover any defects in material finish, including cracking, peeling, chipping, blistering or corroding.

B. Reimbursement for labor necessary to restore or replace components that have been found to be defective under the terms of manufactures warranty shall be guaranteed for ive (5) years from date of original purchase.

PART 2 MATERIALS

2.1 MANUFACTURER

A. The steel ornamental pale high security fence system shall conform to Ameristar Impasse II Anti-Scale Gauntlet 3-Rail system. This was the basis of design. Alternates are acceptable providing they meet or exceed the quality of the basis of design. Burden of proof remains the submitters responsibility.

2.2 MATERIAL

A. Steel material for fence framework (i.e., corrugated pales, rails and posts), when galvanized prior to forming, shall conform to the requirements of ASTM A924/A924M, with a minimum yield strength of 45,000 psi (310 MPa). The steel shall be hot-dip galvanized to meet the requirements of ASTM A653/A653M with a minimum zinc coating weight of 0.90 oz/ft$^2$ (276 g/m$^2$), Coating Designation G-90.

B. Material for corrugated pales shall be a nominal 2.75” x .75” x 14 Ga. The cross-sectional shape of the rails shall conform to the manufacturer's Impasse II® rail design a nominal 2” x 2” x 11 Ga. Pre-drilled holes in the Impasse II® rail shall be spaced 4-3/16” on center, providing a pale airspace of no greater than 1-1/2” (38mm). Tamperproof fasteners shall be used to fasten each pale to rail at every intersection. Posts shall conform to the manufacturer's Impasse II® I-Beam design with a nominal 3” x 2.75” x 12 Ga. for fence panel heights up to & including 8’ height and/or Impasse II I-Beam design with a nominal 4” x 2.75” x 11 Ga. for fence heights greater than 8’ up to 10’ panel height. Fence posts and gate posts shall meet the minimum size requirements of Table 1.

2.3 FABRICATION

A. Pales, rails and posts shall be pre-cut to specified lengths. Impasse II Anti-Climb rails shall be pre-punched to accept tamperproof security fasteners. Post flange shall be pre-punched to accept rail to post attachment. Post web shall be

punched providing a clear opening for interior of rails to align throughout the entire system for affixing conduit, video cabling, IDS wiring, and other components for a complete systems integration. Impasse II Anti-Climb rails shall be attached to post flange providing a bracket-less design at each intermediate post.

B. The manufactured galvanized framework shall be subjected to the PermaCoat® thermal stratification coating process (high-temperature, in-line, multi-stage, multi-layer) including, as a minimum, a six-stage pretreatment/wash (with zinc phosphate), an electrostatic spray application of an epoxy base, and a separate electrostatic spray application of a polyester finish. The base coat shall be a thermosetting epoxy powder coating (gray in color) with a minimum thickness of 2 mils (0.0508mm). The topcoat shall be a “no-mar” TGIC polyester powder coat finish with a minimum thickness of 2 mils (0.0508mm). The color shall be Black. The stratification-coated framework shall be capable of meeting the performance requirements for each quality characteristic shown in Table 2.

C. Completed panels shall be capable of supporting a 400 lb. load (applied at midspan) without permanent deformation. Panels shall be biasable to a 30˚ change in grade.

D. Swing gates shall be fabricated using 2” sq. x 12ga rail, 2” sq. x 12ga. gate ends, and 2.75” x .75” x 0.075 pales. Gates that exceed 6’ in width will have a 2” sq. x 12ga. intermediate upright. All rail and upright intersections shall be joined by welding. All pale and rail intersections shall also be joined by welding.

E. Sliding cantilever gates shall be TransPort IS design matching style, height, and color of fence system. The dual enclosed track slide gate shall be an aluminum component design using tracks, uprights, pales, hardware, fittings, and fasteners. Gate installation shall comply with latest ASTM F2200 standards for automated gates, regardless if the gate is of manual operation.

## PART 3 EXECUTION

### 3.1 PREPARATION

All new installation shall be laid out by the contractor in accordance with the construction plans.

### 3.2 FENCE INSTALLATION

Fence post shall be spaced according to Table 3, plus or minus ½”. For installations that must be raked to follow sloping grades, the post spacing dimension must be measured along the grade. Fence panels shall be attached to posts with brackets supplied by the manufacturer. Posts shall be set in concrete footers having a minimum depth of 36”, coordinate with geotech requirements. The “Earthwork” and “Concrete” sections of this specification shall govern material requirements for the concrete footer. Posts setting by other methods such as plated posts or grouted core-drilled footers are permissible only if shown by engineering analysis to be sufficient in strength for the intended application.

### 3.3 FENCE INSTALLATION MAINTENANCE

When cutting/drilling rails or posts adhere to the following steps to seal the exposed steel surfaces; 1) Remove all metal shavings from cut area. 2) Apply zinc-rich primer to

thoroughly cover cut edge and/or drilled hole; let dry. 3) Apply 2 coats of custom finish paint matching fence color. Failure to seal exposed surfaces per steps 1-3 above will negate warranty. Ameristar spray cans or paint pens shall be used to prime and finish exposed surfaces; it is recommended that paint pens be used to prevent overspray. Use of non-Ameristar parts or components will negate the manufactures' warranty.

## 3.4 GATE INSTALLATION

Gate posts shall be spaced according to the manufacturers' gate drawings, dependent on standard out-to-out gate leaf dimensions and gate hardware selected. Type and quantity of gate hinges shall be based on the application; weight, height, and number of gate cycles. The manufacturers' gate drawings shall identify the necessary gate hardware required for the application. Gate hardware shall be provided by the manufacture of the gate and shall be installed per manufacturer's recommendations.

## 3.5 CLEANING

The contractor shall clean the jobsite of excess materials; post-hole excavations shall be scattered uniformly away from posts.

| Table 1 – Minimum Sizes for Impasse Posts | | | | |
|---|---|---|---|---|
| Fence Posts | Panel Height | | | |
| 4" x 1.75" x 0.100" I-beam | Up to & Including 10' Height | | | |
| 4" x 4" x 11 Ga. | Over 10' Height | | | |
| | | | | |
| Gate Leaf | Gate Height | | | |
| | Up to & Including 6' | Over 6' Up to & Including 8' | Over 8' Up to & Including 10' | Over 12' |
| Up to 4' | 3" x 12Ga. | 3" x 12 Ga. | 4" x 11 Ga. | 4" x 11 Ga. |
| 4'1" to 6' | 3" x 12Ga. | 3" x 12 Ga. | 4" x 11 Ga. | 4" x 11 Ga. |
| 6'1" to 8' | 4" x 11 Ga. | 6" x 3/16" | 6" x 3/16" | 6" x 3/16" |
| 8'1" to 10' | 4" x 11 Ga. | 6" x 3/16" | 6" x 3/16" | 6" x 3/16" |
| 10'1" to 12' | 6" x 3/16" | 6" x 3/16" | 6" x 3/16" | 8" x 1/4" |
| 12'1" to 16' | 6" x 3/16" | 6" x 3/16" | 8" x 1/4" | 8" x 1/4" |

End of Section

# SECTION 43 01 05 – CNG FUELING EQUIPMENT & SYSTEMS

## 1 - GENERAL

### 1.01 SUMMARY OF EQUIPMENT AND WORK REQUIREMENTS

A. Summary Scope. This Specification includes requirements for the mechanical equipment and capabilities for the upgrade of two existing compressed natural gas (CNG) fueling facilities owned by the Regional Transportation Commission of Southern Nevada (RTC or Owner). The requirements listed herein apply similarly to each site, except where noted otherwise.

1. IBMF CNG-System Upgrades. At the Integrated Bus Maintenance Facility, relocate and install (1) simplex CNG compressor skid relocated from SMF, provide and install (1) new duplex CNG compressor skid, (5) dispensers, (6) CNG-storage vessels, (1) matrix-type valve panel, (1) duplex motor-starter panel, and appurtenances and associated work as required in the plans and specifications. Also provide PLC-control upgrades, demolition and equipment-removal scope and related civil, structural and electrical scope per plans and specifications.

2. SMF CNG-System Upgrades. At the Sunset Maintenance Facility, remove (1) simplex CNG compressor skid from SMF and relocate to IBMF, provide and install (3) new duplex CNG compressor skids, (5) CNG-storage vessels, (3) duplex motor-starter panels, and appurtenances and associated work as required in the plans and specifications. Also provide PLC-control upgrades, demolition and equipment-removal scope and related civil, structural and electrical scope per plans and specifications.

B. Related Specifications & Documents.

1. Drawing set numbered 1X-### for IBMF (where ‘X’ represents the design discipline and ‘###’ represents any drawing #).

2. Drawing set numbered 2X-### for SMF (where ‘X’ represents the design discipline and ‘###’ represents any drawing #).

3. Other specification sections, per table of contents of project-specification manual.

C. Other Contractor Responsibilities For CNG Equipment.

1. General. Contractor constructs the work according to the approved project drawings for each site.

2. Modifications to para-transit dispensers at IBMF. Modify three dispensers that were installed in phase A at para-transit fueling building, to one 1” process tubing and 2-hose configuration. Modified dispenser shall have high-flow and a standard flow set of hose and nozzle at each side.

D. CNG Equipment.

1. The equipment specified herein is designed to produce, process, direct and dispense CNG from natural gas transported by the local natural gas utility to existing meter sets assembly (MSA's) at each facility that will be regulated per plans.

E. Additive Alternates.

1. None.

F. Summary Contract Requirements. Work under this Technical Specification requires all site construction, furnishing, delivering and starting equipment as required to make the systems functional, and a five-year warranty covering all parts, labor, and travel, following acceptance by the Owner, including all consumable materials and parts. Consumable materials and parts are those items that are expected to be replaced or replenished during construction and commissioning, and under normal operation, per the replacement schedules published by the respective component or system manufacturers.

1.02 STANDARDS

A. The latest editions of the following listed codes, specifications and standards shall be considered an integral part of this specification. Compliance with the following documents is mandatory:

1. ASME Boiler and Pressure Vessel Code, Section VIII, Division 1, latest edition with latest addenda.

2. ANSI/ASME B31.3 -2002- Process Piping.

3. ANSI/ASME B16.5 Steel Pipe Flanges and Fittings.

4. National Electrical Code (NFPA 70) with Nevada amendments.

5. International Mechanical Code with Nevada amendments.

6. International Fire Code with Nevada amendments.

7. National Fire Protection Association (NFPA) 52, Compressed Natural Gas Vehicular Systems Code, 2013 Edition.

8. National Fire Protection Association (NFPA) 30A, Code for Motor Fuel Dispensing Facilities and Repair Garages, 2012 Edition.

9. Occupational Safety and Health Act, Standards, 29 CFR - Occupational Noise Exposure, 1910.95.

B. The following documents form a part of the Specification to the extent that their respective content is pertinent to the products and methods contained herein and to the extent that work required under this project applies to the documents.

1. American Society of Mechanical Engineers (ASME) Boiler and Pressure Vessel Code, Section V: Nondestructive Examination.

2. American Petroleum Institute (API) Specification 11P.

3. American Society for Nondestructive Testing (ASNT) SNT-TC-1A: Recommended Practice.

4. American Society for Testing and Materials (ASTM)
   a. ASTM A 36: Standard specification for structural steel.
   b. ASTM A213: Standard Specification for Seamless Ferritic and Austenitic Alloy-Steel Boiler, Superheater, and Heat-Exchanger Tubes.

5. American Welding Society (AWS) D1.1-88: Structural Welding Code - Steel.

6. National Electrical Manufacturers Association (NEMA) NEMA 250 - Enclosures for Electrical Equipment (1000 Volts Maximum), latest edition.

1.03 SUBMITTALS

A. Stamping By Professional Engineer. Any new drawings or drawing modifications provided by the Contractor shall be stamped by an appropriate Nevada-licensed Professional Engineer, in accordance with the Nevada Administrative Code.

B. Bill of Materials. A bill of materials, including at least the following: high-pressure tubing, tube fittings and valves; piping; conduit for electrical wiring, electric wire and switches, and devices for vehicular impact protection (i.e. k-rail or concrete-filled bollards).

C. Manufacturers' Warranties. All manufacturers' original standard warranties for material, components and assemblies. These are in addition to the comprehensive Facility warranty that is the responsibility of the Contractor.

D. Approvals. Prior to shipping to site, the Owner shall approve all information required under article 1.03.D.1 and 1.03.D.2.

   1. Packaged Equipment. Submittals are required for all pre-packaged equipment listed in this Section, and are subject to approval by Owner. Submittals shall include all of the equipment listed below, and distinguish per site as required:

      a. Compressor frames and cylinders.
      b. Compressor performance run.
      c. Compressor prime movers.
      d. Compressor cooling sections.
      e. Assembled compressor skid.
      f. 1.03-D-1-Modifications to the master PLC's & programs.
      g. 'Point I/O' retrofit kits for existing compressor skid(s).
      h. Motor control center and motor starters.
      i. TVSS hardware for motor starters.
      j. CNG fast-fill transit dispenser.
      k. CNG fast-fill para-transit high-flow dispenser.
      l. Priority-valve panels.
      m. Shop drawings for ductwork duct supports.
      n. CNG storage vessels.
      o. Air compressor.

p. Air dryer.
q. Gas regulator.

2. Parts & Materials. Submittals are required for all listed components and materials installed between packaged equipment and used in manufacture of prepackaged equipment, and are subject to approval by Owner. Submittals shall include, at a minimum:
   a. Actuated and manual valves.
   b. Pressure relief valves.
   c. Stainless steel tubing and unions.
   d. Polyethylene HDPE pipe, as provided.
   e. CS piping, unions and joints for natural gas and CNG.
   f. Methane detector.
   g. Interstage and discharge coalescing filters.
   a. Particulate filters.
   b. Cathodic-protection materials and equipment for buried piping.
   h. Flange-insulating kits.

E. Tests. Provide test procedure for review and approval prior to performing any test. Provide tests results and reports for review and approval of all tests.

F. Required documentation.

1. The following are required as applicable for each size or type of item listed in article 1.04.D.1 of this Section, as applicable.
   a. Manufacturers' data sheets with dimensional drawings, with pressure rating and testing data for dispenser and other hoses, piping, tubing and valves.
   b. Installation and operating instructions and test procedures.
   c. Recommended maintenance instructions and schedules.
   d. Listing of special tools required for maintenance and testing.
   e. Warranties, including those of the original manufacturer.
   f. Piping and instrumentation shop drawings.
   g. Electrical and wiring-termination schematics.
   h. Test data indicating compliance with all normal and specified functions and processes, including dispenser authorization, dispenser valve-flow control, dispenser pulse-count output for mass, compressor start-stop, compressor ESD, and faults for high dryer-heater temperature, low- and high-pressure compressor suction, high-pressure compressor discharge, high-temperature compressor discharge, low and high compressor-oil pressure.

2. Submittal books shall be grouped and tabbed by assembly or logical system, including a front index of contents. All data for a particular packaged system shall be grouped, i.e. Piping and Instrumentation Diagrams, required sub-component listings, shop drawings, test data, etc. Cut sheets or catalog sheets containing multiple product listings shall include marks to clearly indicate actual unit(s) proposed for use, and all submittals shall include a mark or reference indicating intended location of use or application, i.e. ‘3rd stage pressure relief valve’, ‘compressor inlet manual ball valve’, etc.

## 1.04 QUALITY ASSURANCE

A. Provide all materials, components and services in accordance with a quality control program that assures compliance with the applicable codes, standards, and this specification.

B. Provide qualified test personnel to perform test and inspection functions. Personnel qualifications shall be made available to Owner upon request.

C. All instruments, controls, and other electrical equipment must be qualified for the hazardous area classification where the equipment is to be installed.

1.05 PREPARATION AND COORDINATION

A. Although such work is not specifically indicated, furnish and install all supplementary or miscellaneous items, appurtenances, and devices incidental to or necessary for a sound, secure and complete pre-packaged component.

B. Coordinate accepted equipment changes from those scheduled or specified with other equipment affected.

1.06 PRODUCT DELIVERY AND HANDLING

A. Materials shall be delivered in the manufacturer's original unopened packaging, labeled to indicate the manufacturer's name and product identification.

B. Delivered materials shall be handled to ensure that the packaging and labeling remain intact until installation of material. Materials shall be stored and protected from ground contact and from the elements.

C. All containers, including internal containers, shall be indelibly labeled with item description(s) per title.

D. Misdelivered equipment, material and packages shall be corrected at the Contractor’s expense.

1.07 PAINTING AND FINISH

A. All packaged and manufactured equipment shall be delivered to the work site with specified factory finish. Should the finish be damaged in transit or during the installation, it shall be finished to present a neat workmanlike appearance to the satisfaction of the Owner prior to acceptance.

B. All other materials and components installed or fabricated on site shall have a suitable multi-coat industrial-grade finish applied, as specified elsewhere in this Specification.

1.08 RECOMMENDED SPARE PARTS LIST (RSPL)

A. Prepare a listing of all parts on a RSPL form for each individual piece of equipment or system that is of a maintenance significant nature.

B. Submit the RSPL to the Owner for approval. Upon receipt of the approved RSPL, procure, expedite, receive, inspect, check, and store spare parts at a location

designated by the Owner. Procurement of spare parts will be under a separate contract than the equipment procurement described herein.

## 1.09 INSPECTION, TESTING AND ACCEPTANCE

A. General. The Contractor shall be responsible for proving to the satisfaction of the Owner that the minimum specifications for the Equipment and installation work, as described herein, have been met. The Owner will require the execution of various inspections and tests, including their documentation, prior to accepting the Equipment as complete and in compliance with these specifications. Such inspections and tests shall be based on recommendations by the Contractor, as well as the CNG-skid manufacturer and manufacturer/vendors of various components and systems of the Facility. If the Owner determines that such recommended inspections and tests are not adequate, the Owner shall require additional inspections and tests as needed. Inspections, witnessing of tests, or waiving of any such procedure by the Owner shall not release the Contractor, or other vendors from full responsibility for compliance with equipment, material and functional requirements according to the project specifications.

B. Requirements. Contractor shall supply the Owner all recommended acceptance and testing procedures and test results of main vendor and other vendor in-process manufacturing, factory pre-delivery functional demonstration, installation and start-up tests for at least the components and systems described as:

1. CNG compressor skids.
2. New and modified CNG fast-fill dispensers.
3. Valve panel.
4. Modifications to controls, I/O modules & PLCs.
5. Performance test demonstrating satisfactory flow rate of CNG system.
6. Modified ESD system.
7. Expanded gas detection systems.
8. Temperature compensation of dispensers.
9. Theory of operation in programing and control with updated parameters.
10. Vibration set points and vibration behavior of compressors and cooler-fan assemblies, including screen shots of controller showing above parameters.
11. Processing memory capacity of master PLCs.

C. Contractor shall also provide test equipment, material and labor to conduct on-site testing and start-up procedures. Such procedures will be provided to the Owner to include each of the above components and systems. All tests shall be made available to be witnessed by the Owner to determine compliance with specifications.

D. Documentation and Notification. Recommended procedures for main-vendor manufacturing acceptance and testing shall be submitted in writing to the Owner not more than thirty days after contract award, or not later that two weeks prior to start of tests, whichever occurs first. Complete compressor skids, dispensers, storage-vessel assemblies and gas dryer must be accompanied with factory test, inspection reports and manufacturer warranties at or before delivery to site. Notification that such procedures will be witnessed by Owner will be given at least 48 hours prior to start of construction test/inspection, and at least two weeks prior to factory test, unless

otherwise agreed to by vendor; additionally, the Owner will give notice of required modifications to inspections and tests originally recommended, if any, at this time.

E. In-Process Manufacturing Inspections. Included shall be recommendations for inspections and tests, if any, to be performed at 50-percent completion, and again at 100-percent completion, of compressor-skid manufacture/assembly at compressor-skid vendor's site. Purpose of inspections shall be to confirm schedule and design compliance, and at 100-percent complete inspection and testing, for functional verification of all relevant components and systems. Inspections and tests may be conducted by Owner or Owner's representative at Owner's discretion.

F. Criteria. All design performance pass/fail criteria to be recommended by the Contractor and other vendors shall be submitted with the Contractor bid proposal as limits of acceptability for performance requirements of all equipment provided as required herein.

G. Acceptance. Owner will only accept facility as complete after Contractor provides compliance with the requirements under article 1.10, and article 3.08.

1.10 WARRANTY

A. General. The Contractor shall provide a written warranty that the equipment and related materials specified herein and as shown on the associated project drawings be free from defects in design, installation, workmanship and construction for a period of one years commencing with the final acceptance of the equipment package by the Owner as being complete. The Contractor shall also provide a written warranty that all components, systems and materials specified herein shall be free from defects in design and manufacture for a period of one years, commencing with the acceptance of the Facility by the Owner as being complete. Contractor shall pay all costs for parts, labor and travel as required to satisfy warranty claims.

B. Original Component Warranties. All manufacturers' original standard specifications and warranties for material, components and assemblies shall be forwarded to the Owner. These are in addition to the comprehensive Facility warranty that is the responsibility of the Contractor. Contractor shall design the system, and complete all work in such manner so as to not invalidate any applicable Original Component Warranties.

C. Warranty Enforcement. In case warranty is invoked, Contractor shall ensure that the appropriate installer, supplier, and/or manufacturer, i.e. component manufacturers and/or sub-vendors and suppliers(s), shall respond with suitable repair within 48 hours of notification. This shall be provided with no cost to the Owner including any cost for labor, parts and tools.

D. Consumables. All consumable parts and material including lube oil for normal operation of equipment that are installed in this contract shall be provided by contractor during construction and commissioning process until substantial completion of project.

2 - PRODUCTS

## 2.01 GENERAL

A. New Equipment. Equipment to be supplied by the Contractor shall be in new condition unless otherwise permitted by the Owner, in writing, and shall include all components and systems necessary to operate the respective system or component, compressors, prime movers, gas coolers, gas dryer, CNG storage vessels, dispensers, CNG-flow control systems, blowdown receivers, filters, safety systems, skid, frame and enclosure, and other related components and systems as described herein.

B. Pressure Ratings. All piping, tubing, unions, vessels, valves, filter bodies and appurtenances shall have a manufacturer's rated normal working pressure that is equal to or above its respective normal duty pressure, with a burst-safety factor as specified by either ASME B31.3, or the ASME Boiler and Pressure Vessel Code, as appropriate. Such ratings shall be indicated on component and material submittals to be approved by Owner.

C. Electrical Classifications. All electrical and electronic components shall be installed and configured appropriately for their respective service conditions and locations. All such installations shall comply with NFPA 70 standards for Class I, Group D, Divisions 1 and 2, and as stipulated in Table 8.4.2.9 of NFPA 52, 2010, or other requirements as called for by AHJs.

D. Material Compatibility. Contractor shall be responsible for providing and installing components and materials throughout the entire Facility that are compatible with, and do not adversely react to other component or material that could be expected to come in contact during normal operation.

E. Ball Valves. All ball valves shall use 3-piece construction. Ball valves smaller than NPS 2 shall include bodies, balls and stems fabricated from 304 or 316 stainless steel, and shall have a listed MAWP of not less than the highest service pressure normally existing in the process segment where it will be located. Ball valves in sizes NPS 2, or larger, may have carbon steel bodies, but otherwise shall otherwise meet the above specification for ball valves smaller than NPS 2. Actuated ball valves shall use pneumatic operators powered by a common control-air system. Actuators driven by electric motors or regulated CNG are not allowed.

F. Operating Environment. All equipment, components, materials, displays and systems provided shall be designed for normal operation in an un-shaded environment with ambient temperatures ranging between 20ºF and 115ºF, unless explicitly excepted elsewhere in this specification section.

## 2.02 CNG COMPRESSOR SKIDS

A. General. Furnish CNG compressor systems installed in pre-assembled duplex skids. Provide compressors each designed for use with natural gas and with a minimum discharge capacity of 919 SCFM at 4500 PSIG, at the 165 psig suction pressure and 300 HP drive motor. This applies to new compressor skids at both sites.

B. Inlet Appurtenances. The following appurtenances shall be packaged by or coordinated with compressor-skid packager.

1. Provide inlet regulation downstream of the MSA for each compressor with an appropriate outlet pressure to maximum allowed inlet pressure, as coordinated with the compressor packager/manufacturer. Contractor shall verify range of adjustability of the existing regulators. Provide new regulator(s) as needed and include pressure gauge immediately downstream of each regulator.

2. 12” long suction flex line rated for 250 PSIG MAWP.

3. Suction-check valve.

C. ESD Buttons. A button shall be located on the outside of each skid.

D. Enclosure. Provide skids without enclosures but include standard cooler-diffuser hoods.

E. Enclosure Accessories. None.

F. Vibration Sensors. Install analog vibration sensor/ transmitter on all new compressor skids, as well as on all pre-phase A and relocated skids.

1. Mount analog vibration sensor/ transmitter at each CNG compressor and cooler-fan assembly. The analog vibration sensor shall function as an RMS peak detector of vibration velocity, and transmit data to its master PLC via the Point I/O module on its respective skid.

2. Provide Metrix Vibration Transmitter, model ST484E-132-114-02.

3. Vibration Speed Limits. The sensors at the compressors shall set a Vibration Speed Warning at 0.6 IPS and shall set a shutdown fault at 0.8 IPS. The sensors at the cooler-fan assemblies shall set a Vibration Speed Warning at 0.8 IPS and shall set a shutdown fault at 1.0 IPS. Above criteria is for vibration lasting for 1 second or longer.

G. Acceptable CNG compressor skid manufacturers:

1. ANGI Energy Systems LLC
   Janesville, WI 53563
   Telephone: (800) 955-4626

H. Sites and Quantities.

1. IBMF. Provide (1) duplex compressor skids for IBMF.

2. SMF. Provide (3) duplex compressor skid for SMF.

## 2.03 CNG COMPRESSORS

A. General. These requirements apply to Ariel compressors, or approved equal, and related equipment mounted on a skid, intended for vehicular-use natural gas only, a design-maximum discharge temperature immediately downstream of each stage of compression of no more than 20° F greater than the design ambient temperature of up to 115ºF and outdoor installation.

B. Required Capacity.

1. Original Installation. Each of two compressors on each duplex skid shall be sized to generate not less than 919 SCFM of CNG at a discharge pressure of 4500 PSIG at 165 PSIG suction pressure. The design capacity shall also allow for all pressure drops through filters, pulsation bottles, interstage devices, dryer, coolers and piping from the inlet flange to the discharge-tubing connection on the skid.

C. Compressor Size. The compressor frame shall be furnished with cylinders which, when operating at normal operating condition(s), shall, as closely as practical, load the electric motor to its maximum allowable load.

D. Interstage Velocity. The velocity of gas from inlet to discharge shall not exceed 50 feet per second at the design conditions. All piping, coalescers, valves, unions etc. shall be sized appropriately.

E. Accessories. Compressors shall be provided with direct or belt drive assemblies, interstage and discharge coalescers, and interstage- and after-cooling. Each compressor shall be designed for automatic starting, unloading and captured blowdown and equipped with a normally-closed actuated inlet valve, discharge check valve, suction particulate filter, and discharge coalescing filter. The actuated inlet valve shall be controlled by the PLC.

F. Lubrication System. Compressor cylinders and crossheads may be either be oil-lubricated or non-lubricated. Crank shafts shall be oil lubricated.

1. Lubricating Oil Consumption. Net carryover of lubrication oil from the compressor crankcases through to the dispensers shall be no greater than 0.5 pounds of oil per million SCF of compressed natural gas. Net carryover shall not include oil drained or recovered from the blowdown receiver and coalescers.

2. Piston Rings. All compressor piston rings shall be ferrous or synthetic, subject to approval by Owner.

3. Piston-Ring Wear. Compressor piston rings shall have a minimum design life of 4,000 operating hours and be listed as part of the written warranty. Upon ring wear not meeting 4,000 hours, as defined by interstage/discharge pressures and/or temperatures falling outside of factory-listed tolerances (and not caused by another factor such as debris or a failed valve), the Contractor shall replace rings, including parts, labor and any travel costs. Validity of warranty claims shall subject to verification by the Contractor or compressor manufacturer that the Owner has performed compressor PM, as prescribed by O&M manual.

4. Lube Oil. Compressor-lube oil for both crankcase lubrication and cylinder lubrication shall be a diester-type synthetic oil, and as approved by the compressor-skid packager.

G. Compressor Crankcase Ventilation. Each compressor shall be equipped with means to prevent an accumulation of combustible gases in the crankcase. Vent exhaust shall be directed to a safe location outside of the skid enclosure and shall be protected from rain and debris by a rain cap or similar means.

H. Interstage Coalescing Filters. Each oil-lubricated stage shall include an oil-coalescing filter downstream of the cooler outlet for that stage. Coalescing filters shall be fitted with automatic drainage to the compressor's blowdown-recovery vessel.

I. Loadings. Compressors, drive motors and auxiliary equipment shall be designed and constructed to operate under full load at normal operating conditions.

J. Pressure Rating For Controls. All pneumatic-valve controls shall used compressed air and have an MAWP equal to or greater than the maximum pressure to which they will be subjected during normal operation of the compressors, but not less than 200 PSIG.

K. Appurtenances. Each compressor stage shall include a surge chamber with enough capacity to adequately dampen the effects of compressor pulsation on adjacent components, and shall include a flexible inlet pipe section to protect against vibration and movement of the compressor vs. the suction-supply piping. Final discharge from each compressor shall be teed to a common tube/pipe to edge of skid. The MSA and each compressor discharge shall be protected by check valves.

L. Alignment. Direct compressor-drive alignment shall be set in the factory using a commercial laser alignment system, (e.g., Hamar Laser). Laser alignment shall verify rigidity of the motor mount (avoid excessive soft-foot alignment), and parallelism of the axes of rotation between the motor and compressor crankshaft prior to shipment. Alignment shall be mechanically field verified to factory tolerance following completion of all anchor connections but prior to any bump-over or startup on site.

M. Design Conditions. The compressor system shall be capable of operating within the full range of conditions specified below. Values listed as 'design' shall be used for sizing the compressors with respect to specified flow rate.

1. Gas Conditions. The incoming gas supply will have a design specific gravity of 0.59 and a temperature of 80ºF.

2. Ambient Temperature. The ambient temperature will range from 20ºF to 115ºF, with a typical design temperature of 75ºF.

## 2.04 CNG COOLING SYSTEM

A. Design. Forced draft air circulation shall be used to cool the CNG from the heat of compression. Fan drive may be either derived from the prime mover or by its own electric drive motor.

B. Design Criteria. The criteria to be used for design shall include the following:

| | |
|---|---|
| • Max. design ambient temperature | 115° F. |
| • Site elevation above MSL | 2030 feet. |
| • Design compressor suction gas temperature | 80° F. |
| • Max. allowable aftercooler gas discharge temp. | Ambient temp. plus 20°F. |

C. Tube Material. Tube material shall be Type 316 or 304 stainless steel, seamless, and manufactured and labeled according to ASTM A213.

D. Cooler Ducting At Startup. Cooler intake and exhaust sections shall be oriented so as to minimize the introduction of exhaust air from existing and new adjacent skids into the intake of any skid. Discharge ducting shall be fastened to the skid so that it is removable in the future. A canopy over the compressor skids is not included in this phase of work.

E. Future Ducting For Cooler Discharge. Allow for future installation cooler-outlet duct to so that a future vertical-duct riser can be installed for discharging through a canopy that will be constructed in a future-phase.

2.05 SKID-MOUNTED PRESSURE VESSELS

A. Stamping. All vessels requiring ASME stamping shall also be stamped with the following:

- MAWP.
- The water volume of the vessel.
- ASME U-stamp.

B. Suction Filter. Furnish (1) particulate filter upstream of each 1st stage compressor inlet.

1. Specification. This filter shall eliminate all suction gas particles (liquid and solids) with a diameter of 50 microns or greater. The filter shall be adequately sized for the maximum compressor throughput. The filter body design pressure shall not be less than the blowdown receiver relief valve set pressure.

2. Ancillary Equipment. Furnish the suction filter with:
   a. A drain line controlled by a manual valve.
   b. A differential pressure gauge for indicating pressure drop between filter inlet and outlet.

C. Pulsation/Volume Bottles. Pulsation bottles sufficient in capacity to adequately dampen the effects of compressor pulsation on adjacent components shall be included in the following locations: upstream of the first-stage inlet; downstream of final-stage discharge.

1. Compliance. Design of compressor system shall comply with the guidelines of the Compressed Air and Gas Handbook, fifth edition, chapter 10, published by the Compressed Air and Gas Institute, so as to minimize the effects of harmonics and pulsation. Pressure curves in Handbook (Figure 10.50, approximate bottle sizing chart) shall be extrapolated to pertinent working pressures of the relevant compression stages and systems.

2. Drains. Pulsation bottles shall be equipped with drains.

D. Interstage Oil Removal. Inter-stage coalescer downstream of each oil-lubricated cylinder between the interstage cooler and next-stage compressor inlet shall be provided.

1. Size. Coalescing filters shall be housed in Parker J4 housings, or larger, and shall be designed to eliminate 95 percent of entrained liquids and handle liquid accumulation, which may result from 12 hours of continuous compressor operation. Automated in-process blowdown to drain oil accumulations is allowed.

2. Drains. Drains shall be minimum 1/4-inch tube or 3/8-inch pipe and be fitted with a matching check valve. An automatic valve shall be provided to allow liquid blowdown to the blowdown receiver vessel. Drain lines and the actuated valve shall be sized to handle compressor idling gas volumes.

E. Two-Stage Discharge-Coalescing Filtration. Both pre-coalescer and coalescer filters shall be housed in a Parker J4SL housing at minimum and shall be located immediately downstream of the final stage aftercooler. Lesser filtration may be proposed for compressors that do not have force-lube injection on all cylinders.

1. Specification. Coalescer filter discharge shall contain no more oil or other liquid hydrocarbons, exclusive of non-condensables, than 50 part per million on a mass basis. The filters shall be sized for the maximum compressor gas flow rate over gas pressures ranging from 2,000 to 4,500 PSIG so that pressure drop does not exceed 2%. The first filter shall use a Parker Hannifin grade-10 coalescer element and the second filter shall use a Parker Hannifin grade-4 coalescer element.

2. Drains. The filter(s) shall have an automatic liquids purge to the blowdown receiver. An automatic valve shall be provided to allow liquid blowdown to the blowdown receiver vessel. Drain lines and the actuated valve shall be sized to handle compressor idling gas volumes.

F. Blowdown Receivers. Independent blowdown receivers of adequate capacity and pressure rating for the normal operation of each compressor shall be included. Design working pressure for each blowdown system shall be sized appropriately to accommodate the blowdown volume and pressure of the compressor.

G. Connections. The blowdown receiver(s) shall have the following connections:

1. Condensate drain. A 1/2-inch ball valve and drain port shall be provided in a readily accessible location for manual draining of liquids accumulation in the blowdown receiver. Ball valve shall be piped to edge of skid exterior and shall include downward

2. Interstage separator blowdown. A manual ball valve shall be provided to isolate the blowdown receiver from the actuated blowdown valve, to facilitate servicing of the blowdown piping, without the need to depressurize the receiver.

3. Gas connection to compressor suction from the blowdown receiver and its regulator shall be upstream of suction filter and downstream of the suction check valve.

## 2.06 INSTRUMENTS AND CONTROLS FOR COMPRESSOR SYSTEM

A. General. Compressor-system controls, including start and shutdown shall be electronic and shall operate automatically and unattended.

B. Control System. Remote Programmable Numerical Control systems in a NEMA 3-R enclosure shall be used to control all existing, new and existing compressors, matrix valve panels, and dispensers. System shall be a master type and be mounted remotely from the compressor skids. Modify existing program to accommodate and comply with all equipment and required functions. System shall be designed in accordance with the following:

1. Compressor-Skid POC. At each new compressor skid, install an Allen Bradley Point I/O module for digital or analog monitoring as recommended by compressor-skid manufacturer. Wire module to master PLC using CAT-6 Ethernet cable. Module shall connect to and monitor the following items:

    a. Suction pressure.
    b. Each-stage & final-stage discharge pressure.
    c. Each-stage discharge temperature, including discrete per cylinder.
    d. Blowdown pressure.
    e. Oil flow.
    f. Compressor vibration (analog).
    g. Prime-mover run.
    h. Off-skid items w/ separate I/O as required:
        1) Buffer pressure (occurs once).
        2) Methane detection at canopy ceiling (each sensor)

2. Performance Specification. This controller shall be capable of controlling operations of the compressors as required. All set points for this controller shall be modifiable at a remote input/output display panel and shall also be modifiable remotely by computers through Ethernet. Each compressor shall be controlled by the remote master PLC as required.

3. Programmability & Software. Owner shall have unimpeded access to modify set points and operating parameters upon completion of the Work. Contractor shall provide PC-host software (or similar) as required to modify controller program, that resides on Owner's network, including providing training and any specialized PC-interface connector. Contractor shall provide complete and annotated source code for PLC-control program to Owner in electronic format upon completion. Software-development platform for PLC program shall be commercially available at the time of commissioning.

4. Local Display. Master PLC controller is existing and include a 10" touch-type LCD display for fault annunciation, fault display of operating conditions and interface for modifying set points. Modification of set points shall require a password. Display shall include a backlight and shall be rated for outdoor installation. Display shall be protected or oriented on site so that it is clearly visible in any day lighting condition.

5. Remote Supervision. Contractor shall ensure that the RTC has web-based access to master PLC for supervision at any time via the RTC's local network as well as via the Internet. The RTC shall have the ability to view set points, view all system reports and logs, and view real-time status of all available processes. PLC shall be able to generate reports on demand. These reports shall include fault history, ESD

events, gas detection events, etc. and shall provide date, time and location ID of each event.

C. Telecom. All set points for the PLC shall be modifiable at a local input/output display panel and by Internet-based IP access. Controller system shall also provide automatic dial-out function SMS or auto-voice notice in case of fault. Automatic fault annunciation function shall include fault-code indication in message.

D. Performance Specification. Logic in PLC shall prohibit subsequent compressors from starting within 20 seconds of the prior-starting compressor but shall allow all compressors to operate concurrently, based on demand from the fast-fill dispensers and on storage pressure, which shall be adjustable. Controller shall facilitate incremental compressor startup based on threshold-storage pressure. The number of compressors allowed to start shall be limited based on time of day.

E. Data Collection. The PLC system shall gather operating data per specification article 2.07.B.1 on a scheduled selectable time (default as 2 minutes) and log data for trending analysis. Provide up to seven continuous days of trending data in retrievable memory. This data shall be retrievable remotely via IP connection by the Owner.

F. Shutdowns, Alarms and Annunciators.

1. General. All shutdowns, alarms and annunciators shall be monitored by the master PLC, and shall be electronic and adjustable.

2. Specifications. The first column, below, lists the relevant component or system. The second column lists the corresponding required action (i.e. shutdown, alarm, indicator):

3. Compressors:

| | |
|---|---|
| a. Low suction pressure: | Shutdown |
| b. High interstage pressure, all stages: | Shutdown |
| c. High discharge pressure: | Shutdown |
| d. Low lube oil pressure: | Shutdown |
| e. High discharge temp., each cylinder: | Shutdown |
| f. High compressor & cooler vibration: | Shutdown |
| g. High vibration: | |
| • Compressor frame exceeds 0.8” ips for >1sec. | Shutdown |
| • Compressor frame exceeds 0.6” ips for >1sec. | Alarm |
| • Compressor cooler exceeds 0.8” ips for >1sec. | Shutdown |
| • Compressor cooler exceeds 0.6” ips for >1sec. | Alarm |
| h. 20% LEL methane detection level: | Alarm |
| i. 50% LEL methane-detection level: | Shutdown |
| j. High storage pressure, each bank: | Shutdown |
| k. Nearing low control-air pressure (header): | Alarm |
| l. Low control-air pressure (air-supply header): | Shutdown |
| m. High blowdown pressure (95% MAWP): | Shutdown |

4. Electric motors:

a. High winding temperature: Shutdown.

G. Additional Requirements. In addition to the devices previously listed, the panel shall include:

1. Manual shutdown switch.

2. Key lockout.

3. Lights to indicate main power is energized, condition light for each compressor indicating “running”, “standby” or “fault.

4. Compressor automatic-start-cycle failure.

5. First-out fault annunciation.

6. An emergency shutdown switch shall be provided at the control panel. The ESD switch shall shut off the compressor motor power supply and close the actuated suction valve at each compressor. ESD system shall be expandable to other locations on a common 24VDC or 120VAC circuit.

7. Hourmeter. Each compressor shall have a non-resettable hour meter to record cumulative time of operation and may be part of a multi-functional digital display with a backup battery.

8. Motor overload. The annunciator need not specifically call out "compressor motor overload" or "cooler motor overload". Rather the annunciator may indicate a message such as "compressor motor failure".

9. Temperature for high interstage and discharge temperatures shall be measured at the outlet of each cylinder.

10. Modify PLC program to include all added equipment. PLC shall monitor ESD event and show status of each ESD button with its ID.

H. Instrumentation.

1. Temperature Measurement. Thermocouples or resistance thermometer devices (RTDs) shall be used to sense temperature for control functions.

2. Pressure Measurement.

• Required Pressure Gauges. Pressure gages shall be provided for compressor suction, interstage pressures, blowdown receiver and final compressor discharge for each compressor.
• Calibration Valve. All pressure switches and transducer/transmitters shall have a dedicated block-and-vent valve to facilitate pressure calibration. The block valve should be lockable with a wire and lead seal.
• Pressure Gauges. Manual pressure gauges shall monitor the following pressures:
  + Compressor lube oil
  + First-stage suction
  + Each stage discharge
  + Blowdown receiver

I. Timer Control. PLC system shall include ability to program the start/run of any compressor based on time of day (i.e., no start unit B between 5:30 AM and 6:00 PM daily).

J. Acceptable Manufacturers.

1. Allen Bradley.

2. Or approved equal.

2.07 EMERGENCY SHUTDOWN SYSTEM

A. General. An emergency shutdown system shall be provided that, when activated, shall interrupt the power supply to the compressor motors, shut off the inlet natural gas supply valve to the compressors and shutoff the electrical power and the discharge of CNG to the dispensers. The system shall be controlled in the control panel, common to all compressors, be on a normally closed circuit and shall be expandable so that additional switches may be added. Buttons shall be push-in mushroom-head type and appropriately rated as required by location.

B. Specification.

1. Circuit. ESD shall be 120VAC normally closed serial-type circuit, so that the opening (activation) of any ESD switch shall cause an ESD fault. Control panel shall require manual reset from ESD activation.

2. Buttons. ESD buttons shall be red mushroom-headed press-to-open type and must be pulled out to reset. Button shall have a protective fence flush with its face in order to minimize accidental pressing. Buttons shall be rated for class-1 division-2 service if located within a hazardous area.

3. Locations. Install one ESD button on fuel-management terminal, one on exterior wall of CNG-equipment compound, and as otherwise shown on the plans.

4. Wiring. Provide ‘home-run’ wiring for all existing ESD buttons that are not mounted on compressor skids. Wire each ESD button to and through new relay panel located adjacent to master PLC and land at digital I/O landings at master PLC. Program and configure PLC so that all buttons are addressable and have a geographic-location identifier.

2.08 FAST-FILL DISPENSERS

A. General. Items 2.08 A.1 through A.4 apply to all dispensers, unless noted otherwise.

1. Dispensers shall have backlit displays and shall include mechanical 6000 PSI pressure gauges for each hose, visible from the outside of the cabinet. All dispensers shall be from a common manufacturer. All mechanical and electrical POC’s shall be at top of dispenser cabinet. Dispenser shall be capable of delivering fills of 3600 PSIG temperature compensated to 70°F, based on control logic housed in the dispenser.

2. Interface With Fuel-Management Terminal. Dispenser shall be configured for connection to an existing fuel-management terminal, so that terminal must authorize the dispensing of fuel, and so that CNG fuel consumption mass is transmitted to the terminal. Furnish connections between each dispenser and the fuel management terminal for the following signals: handle switch, low-voltage meter pulser and 120V 'authorize' signal. Conductors of different voltages shall be routed in separate conduits.

3. Pulse Calibration. Dispenser shall generate 100 pulse-count per mass of CNG dispensed (i.e. 100 pulses per gasoline-gallon equivalent of CNG). Calibrate dispensers to 126 SCF or 5.660 lb. of natural gas equals 1 GGE.

4. Vent. Provide 1" SS bulkhead outlet fitting for PRV and nozzle vent.

B. Transit Dispenser 1-Hose. One-hose one-meter high-flow transit PLC control CNG dispenser with one-line supply.

1. Specifications. Dispenser shall include one MicroMotion CNG-050 meter, and mechanical vehicle pressure gauge for each hose at exterior of cabinet and shall have a backlit data display. Except as allowed otherwise, all CNG tubing and fittings shall be 1" x 0.134" wall. Vent tubing shall be 1" x 0.134" wall. A means of preventing the escape of CNG from the fast-fill system in case the dispenser is knocked off of its base shall be provided, such as a vibration switch mounted inside the cabinet. Dispenser-control valves shall be ball valves. The transit dispenser shall be capable of 3000 SCFM fill supply of CNG flow rate.

2. Filters.
   a. Oil Coalescing. Dispensers shall include two sequential oil-coalescing filters and a block and bleed valve arrangement to facilitate servicing of filters. Filters shall be housed in Parker-Hannifin J4 housings and shall include grade-10 and grade-4 coalescer elements. Filters shall be located upstream of the meter and control valves and may be located in the dispenser pit beneath or next to the dispenser, and/or in the dispenser cabinet.
   b. Startup Cleaning and Filtration. Contractor shall submit a recommended pipe-cleaning method for approval by the Owner prior to startup.

3. Hoses And Nozzles. Primary hose shall be ¾" x 14 ft. long with 5000 PSIG MAWP, shall have retractor and ILB5 inline breakaway mechanisms with check valves, and be electrically conductive. Retractor shall keep hose from contacting ground when nozzle is in its keeper. Nozzle shall be OPW Sherex CT5000. Include Siamese 3/8" hose-vent line with inline breakaway.

4. Operation. Dispenser shall be controlled by internal logic controller and shall include internal one-bank buffer-type operation with 1" tubing connections and flow path throughput, except for the meter.

5. Controller. Furnish with local PLC controller and proportioning valves system to preauthorize each pair of dispensers upon start-up with internal fill logic for delivering two simultaneous fills at a pair of dispensers.

6. Sites and Quantities.
   a. IBMF. Provide (2) one-hose transit dispensers at IBMF.
   b. SMF. None.

C. Paratransit High-flow Dispenser 2-hose. Two-hose One-meter high-flow CNG dispenser with one-line supply, and internal fill-control logic shall be provided.

1. Specifications. Dispenser shall include one MicroMotion CNG-050 meter, and mechanical vehicle pressure gauge for each hose at exterior of cabinet and shall have a backlit data display. Except as allowed otherwise, all CNG tubing and fittings shall be 1” x 0.134” wall. Vent tubing shall be 1” x 0.134” wall. A means of preventing the escape of CNG from the fast-fill system in case the dispenser is knocked off of its base shall be provided, such as a vibration switch mounted inside the cabinet. Dispenser-control valves shall be ball valves. The paratransit dispenser shall be capable of 3000 SCFM fill supply of CNG flow rate, and shall have one high-flow and one standard-flow hose.

2. Filters.
   a. Oil Coalescing. Dispensers shall include two sequential oil-coalescing filters and a block and bleed valve arrangement to facilitate servicing of filters. Filters shall be housed in Parker-Hannifin J4 housings and shall include grade-10 and grade-4 coalescer elements. Filters shall be located upstream of the meter and control valves and may be located in the dispenser pit beneath or next to the dispenser, and/or in the dispenser cabinet.
   b. Startup Cleaning and Filtration. Contractor shall submit a recommended pipe-cleaning method for approval by the Owner prior to startup.

3. High-flow Hose and Nozzle. Primary hose shall be ¾” x 14 ft. long with 5000 PSIG MAWP, shall have retractor and ILB5 inline breakaway mechanisms with check valves, and be electrically conductive. Retractor shall keep hose from contacting ground when nozzle is in its keeper. Nozzle shall be OPW Sherex CT5000. Include Siamese 3/8” hose-vent line with inline breakaway.

4. Standard-flow Hose and Nozzle. Hoses shall be ½” x 12 ft. long with 5000 PSIG MAWP, shall have retractor and ILB1 inline breakaway mechanisms with check valves, and be electrically conductive. Retractor shall keep hose from contacting ground when nozzle is in its keeper. Nozzle shall be NGV1 type-2 P36, Satubli or equal. Include Siamese 3/8” hose-vent line with inline breakaway.

5. Operation. Dispenser shall be controlled by internal logic controller and shall include internal one-bank buffer-type operation with 1” tubing connections and flow path throughput, except for the meter.

6. Controller. Furnish with local PLC controller and proportioning valves system to preauthorize each pair of dispensers upon start-up with internal fill logic for delivering two simultaneous fills at a pair of dispensers.

7. Sites and Quantities.

   a. IBMF. Provide (3) two-hose paratransit dispensers at IBMF.
   b. SMF. None.

D. Acceptable Manufacturers:

1. ANGI Energy Systems
   Janesville, WI
   Telephone: (800) 955-4626

E. Compatibility. Dispenser shall be certified as compatible with the control system of the compressor skids and by the manufacturer of the dispensers.

2.09 COMPRESSOR PRIME MOVERS

A. General. Each gas compressor prime mover shall be a 460V AC, 60 Hz, 3-phase squirrel cage induction motor. Prime movers shall be totally enclosed and fan-cooled (TEFC), having a minimum continuous rating of 300 HP (base specification), with a 1.15 service factor. Prime movers shall be designed, constructed and tested in accordance with NEMA Standard MG1-1998. Motors shall also comply with the applicable portions of the Energy Policy Act of 1992, and meet NEMA Premium Efficiency design and performance standards.

B. Ratings. Prime movers shall be rated for continuous duty at 60 HZ, single voltage with across-the-line full voltage start at 460 VAC. Prime movers shall have a 1.15 service factor. Torque characteristic shall be NEMA Design B. Motors shall have 4 poles, and a full load rated speed of 1,785 RPM. Motors shall be listed for use in Group D, Class 1, Division 2 hazardous atmospheres.

C. Service Conditions. Motors shall be suitable for continuous duty operation without de-rating under the following service conditions:

1. Exposure to ambient temperatures from 20ºF to 115ºF, plus temperature rise resulting from friction, compression and normal system operation.

2. Exposure to elevations up to 2500 feet.

D. Electrical Design. Motor efficiency shall be evaluated in accordance with IEEE standard 112-1991, Subclause 6.4, Method B. The nominal efficiency, 3⁄4-load efficiency and guaranteed minimum efficiency shall be stamped on the motor's nameplate.

E. Motor Insulation. Motor insulation shall be a non-hygroscopic, chemical and humidity resistant system. The minimum thermal rating of the system shall be Class F, as defined in NEMA MG1-1998. The stator windings shall meet or exceed NEMA MG1-1998, Part 31. Stator shall be double dipped and baked in varnish to form a heavy build that exceeds the test criteria of moisture resistance per NEMA MG-1. When operated at rated horsepower, voltage and frequency, the temperature rise of the stator winding shall not exceed 80°C, when measured by winding resistance. Motor insulation shall be designed and tested to withstand 2000 Volt transients without premature motor failure, and have no cable limitations in motor application.

F. Service Factor. Motors shall be rated for a 1.15 service factor on sine wave power in a 40°C ambient temperature.

G. Mechanical Design. Motor shall be totally enclosed and fan cooled (TEFC). Motor bearings have a degree of protection of IP54, from moisture and foreign material. Motors shall be equipped with ball bearings or roller bearings. Ball bearings shall be the same size on both ends. Bearings shall be re-greasable without disassembling the fan or fan cover and provide for the elimination of purged grease through fittings extending beyond the fan cover. Inner bearing caps shall be provided for bearing retention and to prevent harmful amounts of lubricant from entering the motor interior.

For direct-coupled motors, stabilized bearing temperature shall not exceed a temperature rise of 45°C, as measured by a thermocouple on the surface of the bearing house. Wire analog TC to PLC via Point I/O and set as shutdown fault per manufacturer's recommendation for excess temperature.

1. Bearings shall provide for an L-10 life of at lest 26,000 hours per ANSI/AFBMA 9-1990, based on NEMA belting application limits per NEMA MG1-1993, section 14.41. The insulation system and motor leads shall be compatible with mineral oil.

2. Condensation drain holes shall be provided at the low points in the end brackets and shall be supplied with corrosion resistant breather drain plugs.

3. Ventilating fans shall be of non-sparking conductive plastic material. The proper fan rotation direction shall be indicated by a permanent label on the outside of the motor.

4. The motor's conduit box shall be equipped with a ground lug. Gaskets shall be provided between the conduit box and frame, and between conduit box base and cover, to provide a moisture resistant barrier.

5. Shouldered eyebolts with a minimum safety factor or 10 shall be provided for motor lifting. All fastening hardware shall be hex-head bolts or socket head cap screws with zinc plating. Cast iron motor components shall be primed and painted to surpass a 250-hour salt spray test per ASTM B117-90.

H. Nameplate. Motor nameplate shall be stainless steel, and shall contain the following information in addition to that noted in section 10.40 of NEMA MG1-1993.

1. AFBMA bearing ID.

2. Manufacture date code.

3. Motor weight.

4. Guaranteed minimum efficiency.

I. Airborne Sound. Motor sound power level, when measured at a no load condition, shall not exceed 90 dBA, when determined in accordance with IEEE Standard 85-1973.

J. Vibration. Motor vibration measured in any direction on the bearing housing meets the levels listed below when tested per section 12.08 of NEMA MG1-1993:

1. Unfiltered vibration at rated voltage and frequency shall not exceed 0.15 in/s peak velocity.

K. Production Tests. The motor manufacturer shall perform production tests according to NEMA MG-1-12 and ANSI/IEEE Standard 112, Method B.

1. The following test information shall be recorded and inserted in the motors' shipper.
   a. Winding Resistance.
   b. No load current and speed at rated line voltage and frequency.

c. Current input at rated frequency with rotor at stand-still.
d. High-potential test.
e. The following five unfiltered vibration readings, measured as described above: drive end (horizontal, vertical, and axial) and opposite drive end (horizontal and vertical).

L. Warranty. Motor components shall have a full one-year performance warranty when operated on sine wave power and one year warranty on inverter power.

M. Approved Manufacturers and Models.

1. TECO Westinghouse MAX-E1 Premium Efficiency Severe Duty TEFC.

2. Siemens – Medallion Motors, Premium Efficiency Severe Duty TEFC Type CZ.

3. WEG Severe Duty TEFC.

4. US Motors Catalog No. C50P2C.

## 2.10 MOTOR STARTER PANEL

A. General. Starters matched to the compressor prime movers, cooler-fan motors, and pre-lube pump motors as applicable shall be provided with the compressor system, shall be controlled by the programmable-logic control (PLC) system and shall be located in a non-hazardous area, or in a hazardous area if panel is listed for Class 1 Division 2 Group D service per NEC. For starter assemblies located outside of the hazardous area, house in NEMA 3R or NEMA 4 cabinet. Each cabinet shall contain motor starters for motors of two compressors and two compressor coolers.

B. Electromechanical Motor Control.

1. Compressor fan drive motors and pre-lube pump motors shall be controlled by Full-Voltage Non-Reversing (FVNR) magnetic starters, i.e. across-the-line starters.

2. Magnetic starters through NEMA Size 9 shall be equipped with double-break silver alloy contacts. The starter must have straight-through wiring. Each starter shall have one (1) NO and (1) NC auxiliary contact.

3. Solid-State Overload Relay.
   a. Provide a solid-state overload relay for protection of the motors. The relay shall be Cutler Hammer type CEP7 or approved equal.
   b. The overload relay shall be modular in design, be an integral part of a family of relays to provide a choice of levels of protection, and be listed under UL Standard 508.
   c. The overload relay shall have the following features:
      1) Be self-powered.
      2) Class 10 or 20 fixed tripping characteristics.
      3) Manual or automatic reset.
      4) Provide phase loss protection. The relay shall trip in 2 seconds or less under phase loss condition when applied to a fully loaded motor.

5) Visible trip indication.
6) One NO and one NC isolated auxiliary contact.
7) Test button that operates the normally closed contact.
8) Test trip function that trips both the NO and NC contacts.
9) A current adjustment range of 3.2:1 or greater.
10) Ambient temperature compensated.
11) Ground fault protection. Relay shall trip at 50% of full load ampere setting.
12) Jam/Stall protection. Relay shall trip at 400% of full load ampere setting, after inrush.
13) FVNR Motor starters shall be Cutler-Hammer Freedom Series or approved equal.

C. Solid-State Reduced Voltage Motor Control.

1. Controller for compressor prime mover shall be Cutler-Hammer type S811, and shall have PLC control unit complete with built-in 24VDC control power transformer or other similar programmable soft starter.

2. The solid-state reduced-voltage starter shall be UL and CSA listed.

3. The solid-state reduced-voltage starter shall be an integrated unit with power SCRs, logic board, paralleling bypass contactor, and electronic overload relay enclosed in a single molded housing. The SCR-based power section shall consist of six (6) back-to-back SCRs and shall be rated for a minimum peak inverse voltage rating of 1500 volts PIV.

4. Units using triacs or SCR/diode combinations shall not be acceptable.

5. Resistor/capacitor snubber networks shall be used to prevent false firing of SCRs due to dV/dT effects.

6. The logic board shall be mounted for ease of testing, service and replacement. It shall have quick disconnect plug-in connectors for current transformer inputs, line and load voltage inputs and SCR gate firing output circuits.

7. The paralleling run bypass contactor shall energize when the motor reaches 90 of full speed and close/open under one (1) times motor current.

8. The paralleling run bypass contactor shall utilize an intelligent coil controller to limit contact bounce and optimize coil voltage during varying system conditions.

9. The coil shall have a lifetime warranty.

10. Starter shall be provided with electronic overload protection as standard and shall be based on inverse time-current algorithm. Overload protection shall be capable of being disabled during ramp start for long acceleration loads via a DIP switch setting on the device keypad.

11. Overload protection shall be adjusted via the device keypad and shall have a motor full load ampere adjustment from 30 to 100% of the maximum continuous ampere rating of the starter.

12. Starter shall have selectable overload class setting of 5, 10, 20 or 30 via a DIP switch setting on the device keypad. Starter shall be capable of either an electronic or mechanical reset after a fault. Units using bimetal overload relays are not acceptable. Over-temperature protection (on heat sink) shall be standard.

13. Starters shall provide protection against improper line-side phase rotation as standard. Starter will shut down if a line-side phase rotation other than A-B-C exists. This feature shall be disableable via a switch on the device keypad.

14. Starters shall provide protection against a phase loss or unbalance condition as standard. Starter will shut down if a 50% current differential between any two phases is encountered. This feature shall be disableable by a switch on the device keypad.

15. Start shall provide protection against a motor stall or jam condition as a standard feature. Starter shall be provided with a Form C normally open (NO), normally closed (NC) contact that shall change state when a fault condition exists. Contacts shall be rated 60 VA (resistive load) and 20 VA (inductive load). In addition, a display on the device keypad shall indicate type of fault (Overtemperature, Phase Loss, Jam, Stall, Phase Reversal and Overload).

16. The following control function adjustments on the device keypad are required:
    a. Selectable Torque Ramp Start or Current Limit Start.
    b. Adjustable Kick Start Time: 0-2 seconds.
    c. Adjustable Kick Start Torque: 0-85%.
    d. Adjustable Ramp Start Time: 0.5-180 seconds.
    e. Adjustable Initial Starting Ramp Torque: 0-85%.
    f. Adjustable Smooth Stop Ramp Time: 0-60 seconds.
    g. Units enclosed in motor control centers shall be of the same manufacturer as that of the circuit breaker and motor control center for coordination and design issues.
    h. Maximum continuous operation shall be at 115% of continuous ampere rating.

17. Each starter shall be equipped with MOV surge protection on the line side of motor starter.
    a. Cutler Hammer model EMS39 or approved equal.
    b. Refer to plans for short circuit rating of starters.

18. Factory testing. Standard factory tests shall be performed on the equipment provided under this section.
    a. All tests shall be in accordance with the latest version of UL and NEMA standards.
    b. The manufacturer shall provide three (3) certified copies of factory test reports.

D. Transient Voltage Surge Suppression.

1. General. Furnish a surge suppression device or devices (SPD) to protect equipment serving the CNG skid and control system. SPD shall be listed in accordance with UL 1449, Second Edition, to include Section 37.3 - highest fault current category. SPD shall be listed under UL 1283.

2. SPD shall provide surge current diversion paths for all modes of protection; L-N, L-G, N-G in WYE systems, and L-L, L-G in DELTA systems.

3. SPD shall meet or exceed the following criteria:
   a. Minimum surge current capability (single pulse rated) per phase shall be 80kA per phase
   b. UL 1449 Listed Suppression Voltage Ratings for distribution shall not exceed the following:

| VOLTAGE | L-N | L-G | N-G | Max. Continuous Overvoltage (MCOV) |
|---|---|---|---|---|
| 208Y/120V | 330V | 330V | 330V | 150V |
| 480Y/277V | 700V | 700V | 600V | 320V |

4. SPD shall have a minimum EMI/RFI filtering of –50dB at 100kHz with an insertion ratio of 50:1 using MIL-STD-220A methodology.

E. Appurtenances.

1. Provide contactor and breaker for power to suction-gas dryer, if Alternate #1 is procured.

2. Provide single-phase transformer for controls and lighting and other single-phase loads directly associated with the compressor system.

## 2.11 STORAGE VESSELS

A. General. ASME-rated cylindrical CNG storage vessels shall be provided. Vessels shall have an MAWP of 5,500 PSIG, shall include framing and bracing. Vessels shall be fabricated in accordance with ASME Section VIII, Division 1, and shall be painted white.

B. Valves And Drains. Each vessel shall include a full-port 3/4” pressure relief valve (PRV) set at 5500 PSIG with a full-port 3/4” ball valve locked open between the PRV and the vessel. Each vessel shall include a 3/4” service ball valve, a drain port at its low point with a throttling plug valve. Outlet of drain port shall be anchored and shall be directed away from servicing personnel. Slope towards drain end.

C. Vent Riser. Furnish a 1” dia sch 80 elbow and vent-riser port at each PRV outlet with opening min.

D. Configuration.

1. At IBMF provide (6) cylindrical CNG storage vessels 37’ L x 20” OD x 1.303” MW with minimum capacity of 19,000 SCF each at 4,500 PSIG at 70° F. Arrange vessels 2 wide x 3 tall and slope towards drain end 1” over total length of vessels.

2. At SMF provide (5) cylindrical CNG storage vessels 23’ L x 20” OD x 1.303” MW with minimum capacity of 11,500 SCF each at 4,500 PSIG, and 70° F. Arrange vessels 1 wide x 3 tall and slope towards drain end ¾” over total length of vessels. Also install 1 each vessel on top of 2 existing stacks of vessels. Final vessel configuration will be 3 wide x 3 tall.

E. Acceptable Manufacturers:

1. CP Industries
   Telephone: 412-664-6681

2. FIBA Technologies
   508-887-7162

3. Or approved equal.

2.12 CONTROL-AIR/GAS SYSTEM

A. General. For any valves that require pneumatic drive to power the actuators, the Contractor shall install ¾" and ½" type-K copper tubing to extend existing CA system and 100 PSI CA regulators at each packaged unit, such as compressor skid, valve panel or dispenser. Regulators and actuators shall be listed for compressed air service, be adjustable and have a min. MAWP of 200 PSIG. Provide a ball valve immediately upstream of each regulator to facilitate regulator servicing.

B. Regulator and PIs. Provide a pressure gauge scaled to 200 PSIG immediately downstream of each regulator.

C. Air compressor. Provide one duplex air compressor skid at each site. Air compressor skid shall contain 2 x 5 hp compressors and one 120 Gal receiver, and min. MAWP of 180 PSIG. Furnish with starter alternator, belt guard with air-cooled after cooler, and vibration isolators. Each single air compressor shall be capable of generating 19.1 SCFM at 125 PSIG. Furnish with ASME inter-stage pressure relief valve, 10 Micron industrial grade air filter, ASME receiver, 0-300 PSIG air pressure gauge, low-oil level monitor in NEMA 4 enclosure, and high-temperature switch. Compressor drives shall be 2 x 5 HP, 3-phase, 460 V, and programmed to run alternately.

   1. Acceptable model: Champion HR5D-12, or approved equal.

D. Air Dryer. Provide a twin-tower air dryer at each site with heatless and purge-type regeneration. Dryer shall have a ¾" process lines, a min. flow capacity of 20 SCFM and an MAWP of 180 PSIG. Controls shall include manual and automatic tower switching. Include a ¾" ball valve (brass) and a 200 PSI pressure gauge at inlet and a 200 PSIG pressure gauge at outlet. Dryer shall be Quincy or approved equal.

2.13 Site Accessories and Equipment.

A. Safety Signs.

   1. Contractor shall provide a complete safety sign package per NFPA 52 requirements as needed for the new or modified equipment. Signs shall be fabricated from metal and all materials and finished surfaces shall be listed for outdoor use and shall be UV resistant.

   2. All new signs shall be bilingual with English and Spanish wording.

B. Fire Extinguishers. Provide total of (5) 4A:20BC fire extinguisher, each located within 20 ft of each new compressor skid, or as shown on the plans. Coordinate locations by the Owner.

C. Protection. See article 3.04.A for requirements for protection of equipment.

## 3 - EXECUTION

### 3.01 GENERAL

A. Execution is described in the respective Product description of this section, except as otherwise described within article 3 of this section.

B. All components and equipment shall be installed according to the respective manufacturers' instructions and recommendations. Industry-standard practices shall apply if no manufacturer instructions exist.

C. Contractor shall coordinate location and timing of all excavation and open trench work that may affect the normal movement of vehicles and personnel on the job site. Contractor shall also provide trench plates as required for the traffic they may be exposed to until trenches are repaired to match surrounding grade.

### 3.02 WORKMANSHIP

A. Labor shall be performed by mechanics skilled in their particular trade. Pipe and equipment shall be installed square and plumb accessible for proper operation and service. Installation shall be consistent with completeness and appearance whether concealed or exposed.

B. Seals and Sealants. Seals and sealants that are exposed to natural gas or CNG shall be compatible with natural gas as well as the diester-type compressor-lube oil as applicable.

### 3.03 SAWCUT AND REPAIR

A. Demolition. All concrete and AC pavement that is excavated shall be saw cut in neat and straight lines. No saw overcuts will be allowed.

B. AC Pavement Repairs. Repairs, including for trench work, shall be made to match pre-demolition conditions, including thickness and approximate color. Apply new pavement over 6-inch Class II aggregate base, 95% compacted.

C. Concrete Repairs. Repairs, including for trench work, shall be made to match pre-demolition conditions, including thickness and approximate color. See specification section 033000 for additional requirements for concrete repairs.

### 3.04 PROTECTION OF EQUIPMENT

A. General. CNG compression, storage and dispensing equipment shall be protected against vehicular impact. The CNG equipment compound and dispensers shall be protected by concrete-filled pipe bollards as located on the drawings, or by means otherwise required by the AHJ's.

### 3.05 PIPING AND APPURTENANCES

A. General. Seamless stainless steel tubing, stainless steel pipe, or seamless carbon steel pipe shall be used to conduct CNG. Cap any unused (i. e. future) tubing and/or piping.

1. Service Pressure. Piping, tubing and appurtenances downstream of compressor discharge shall have a manufacturer-rated working pressure of 5,000 PSI, in accordance with ANSI B31.3, *Process Piping*.

2. Shipping. While in transit, all hose and flexible metal hose and tubing, including their connections, shall be protected from wear or injury and shall be capped.

3. Markings. Hose, metallic hose, flexible metal hose and tubing shall be distinctly marked either by the manufacturer's permanently attached tag or by distinct markings every 5 feet indicating the manufacturer's name or trademark, material grade, service and working pressure.

4. Dissimilar Metals. Connections between dissimilar metals shall include dielectric insulation. This includes piping and other metallic connections.

5. Blowdown Tees. Within specified equipment, piping and high-pressure tubing systems and sections shall be equipped with blocking ball valves and blowdown tees or needle valves to facilitate equipment maintenance. Blowdown valves shall discharge in a manner that directs the discharging gas safely away from the person using the blowdown valve. Discharge lines on blowdown valves shall be equipped with threaded end caps to seal the line in normal service, so as to prevent accidental line depressurization and gas release. Block valves and blowdown tees shall be provided at all filter locations for safe depressurization of filter housings.

B. Pipe Routing. All gas, CNG and control-air piping inside the CNG-equipment compound shall be located and routed aboveground, unless shown as dashed piping on the plan drawings. Piping may be installed below grade, if it is installed in a pre-cast concrete pipe trench that is covered and rated for traffic and loads to which it may be exposed. Piping shall be ganged on common runs, racks and carriers where appropriate and shall be insulated against cathodic action and contact with dissimilar metals. Piping and tubing outside of the compound shall be routed underground.

C. Piping.

1. Pipe Specification. Pipe containing flammable material shall be seamless carbon steel manufactured in accordance with ASTM A-106 Grade B. All pipe, fittings and other piping components shall be suitable for the full range of pressures, temperatures and loadings to which they may be subjected with a factor of safety of at least four (4). Any material used, including gaskets and packing, shall be compatible with natural gas and its service conditions.

2. Connections.

a. Small Pipe Connections. For 2-inch or under nominal pipe size with maximum operation pressure greater than 15 PSIG, the connections shall be socket welded in accordance with ASME/ANSI B31.3, except that twenty five (25) percent random dye-penetrant examination and one hundred (100) percent

visual examination is required. Each weld shall be de-scaled and internally cleaned from any welding slag. Documentation of examination shall be transmitted to the Owner within 5 working days of examination. One hundred (100) percent of pipe welds made outside of the CNG-equipment area shall be inspected via dye-penetrant examination.

b. Large Pipe Connections. For over 2-inch nominal pipe size with maximum operation pressure greater than 15 PSIG, the connections shall be butt welded in accordance with ASME/ANSI B31.3 except that twenty five (25) percent random radiographic x-ray examination and one hundred (100) percent visual examination is required. Each weld shall be de-scaled and internally cleaned from any welding slag. Documentation of examination shall be transmitted to the Owner within 5 working days of examination.

c. Flange Joint. Flanges shall be in accordance with ANSI B16.5. Weldneck raised face flanges shall be used unless specified otherwise. Ring-type joints or spiral-wound metallic gaskets with centering ring shall be employed for ANSI class 900 flanges or higher.

d. Sealing. Threaded pipe joints shall be seal welded. However, seal welding is not required on instruments or where disassembly is required for maintenance.

e. Pre-start Pipe Cleaning. Piping sections between packaged components that include piping or tubing intended for CNG shall be blown clean prior to connection to equipment. Blow out shall be achieved by closing the downstream end of pipeline with a 5,000 PSI-rated ball valve, connecting a minimum 1,650 PSI-source pressure vessel to the upstream end of the pipeline, opening supply valve at source so that minimum 750 PSI accumulates in pipeline, then opening outlet ball valve to atmosphere. Procedure shall be repeated until no solid or particulate matter is discharged from the pipeline. For gas-supply lines, limit pressure to 300 PSIG and for compressed air lines, limit pressure to 200 PSIG.

1) Personnel opening and closing ball valve at downstream end shall take care to keep clear of the discharge path of the blowout, and shall wear eye and ear protection during procedure.

2) Direction of blowout flow shall be performed in both directions if possible.

3) Contractor shall take care to clear area at pipeline discharge to prevent property damage or injury during procedure.

f. Startup Filtration. ‘Witch’s hat’ or similar strainer devices shall be installed where practical at termination of such piping sections prior to system startup and shall be checked, cleaned and replaced by the Contractor as required until all residual pipe debris has been removed.

3. Pipe Fabrication. All internal pipe surfaces of piping between components shall be cleaned over its entire length, removing dirt, debris and loose corrosion products before pipe is lined up for welding. The open ends of all strings of pipe

shall be kept securely closed to prevent the entrance of dirt, debris, water or animals into the pipe.

4. Field-applied Paint. All aboveground carbon steel pipe, pipe supports and pipe bollards shall be painted using a suitable industrial maintenance coating, including exterior grade, and resistance to UV. Surface preparation and selection and application of primer and finish coat shall conform to the paint manufacturer's written instructions.

D. High-Pressure Tubing.

1. Tubing Specification. Gas tubing shall be stainless steel ASTM A-213 or ASME SA213 cold drawn, bright annealed seamless tubing. Tube material shall be Type 316 stainless steel.

2. Installation of Tubing and Tube Fittings. Swagelok, Parker A-Lok, or Hoke tube fittings shall be used. Contractor shall use tube fittings from a single manufacturer throughout a prepackaged component, so as to simplify use and consistency of appropriate repair parts. Type 316 stainless steel fittings shall be used with stainless steel tubing. Manufacturers' personnel who install tubing and tube fittings shall be trained and certified by the fitting manufacturer for such activity, and proof shall be provided. Tubing shall be installed neatly and in a workman-like manner as per manufacturer's design and recommendation. All tubing shall be properly anchored, supported or pitched and shall be protected from impact. As CNG tubing dilates and contracts in response to its wide range of operating pressures, Parker ParKlamp assemblies, or approved similar resilient anchors, shall be used to support gas tubing. Parker Seal-lok fittings shall be used for tube fittings for tubing ¾" or larger.

3. Valve Clearance. All valves shall be accessible for easy operation and maintenance.

E. Instrument Piping. Provisions shall be made in installation of piping and tubing to accommodate field servicing and calibration of instruments.

F. Valves.

1. General. All valve bodies shall be permanently marked by the manufacturer with their service pressure ratings.

2. Shut-off Valve. A full-port manual ball valve shall be installed immediately downstream from the connection to each compressor-discharge line and the skid outlet line, to facilitate servicing.

3. Compressor Discharge Check Valve. A backflow preventer (check valve) shall be provided at each high-pressure outlet, in order to prevent backflow into the compressors from ancillary equipment. Backflow preventers shall be suitable for use at the maximum pressure to which they are subjected.

4. Pressure Relief Valves. Pressure relief valves installed to protect each isolated piping system shall have sufficient capacity and shall be set to open at a pressure

not exceeding 125% of system MAWP or the pressure which produces a hoop stress of 75% of specified minimum yield strength, whichever is lower. Pressure relief valve (PRV) shall be of the following type, or approved equal: Anderson Greenwood Type fabricated with stainless steel, having an orifice size appropriate for the pressure and volume/rate that it is protecting.

5. Stamping. All relief valves shall be ASME rated and stamped with their set pressure and date of setting by manufacturer. Date stamp shall be less than 3 months from date of delivery to site.

6. Control. There shall be no shutoff means in the discharge line of a pressure-limiting device or between the relief valve and the pressure source that it controls.

7. Relief Valve Venting. Each relief valve shall be connected to a vent pipe constructed of schedule 80 carbon steel pipe with primed and epoxy coating, or approved equal coating. The vent pipe shall vent released gas at an elevation 10 feet above grade or another approved, safe location and shall be properly anchored and supported against anticipated vent force. Escaping gas shall not impinge on a vessel, valves or fittings. Except for safety valves that are integral with service valves, relief-valve vent pipes on tanks shall be installed in a vertical position and shall be fitted weep holes at the low point of the pipe.

8. Relief Valve Vents. Each vent pipes shall be capped with rain caps as a means of preventing the entry of water and debris.

9. Prohibited Pressure Relief Devices. Fusible plugs and/or rupture plugs are prohibited for primary relief devices.

10. Actuated Valves. All valves requiring automatic actuation shall be ball type with port sizes not smaller than the largest line connection. Actuators shall be pneumatic, and matched to valve, subject to Owner approval. Solenoid valves or actuation by regulated gas or electric operators are prohibited unless specifically approved by the Owner during facility design and submittal review.

## 3.06 LABELING

A. Major Equipment. The manufacturer shall provide a stainless steel or brass nameplate on each major item of equipment. The nameplate shall be mechanically affixed and shall be embossed with the manufacturer's name, address, model number, serial number, pressure rating and flow capacity.

B. Valves. The Contractor shall provide a uniform brass or stainless steel embossed nameplate on or adjacent to valves located as listed below. The nameplate shall be mechanically affixed.
   1. All dryer valves.
   2. Gas and CNG connections at the exterior perimeter of the compressor skid.
   3. CNG valves and connections at the valve panel.
   4. All valves for the control-air system.
   5. CNG connections at the dispensers.

## 3.07 FIELD-STARTUP SERVICES

A. General. Contractor shall provide field-startup services from manufacturers' authorized representatives and vendors, including on-site assistance as required for the following equipment at each of the two project sites:

1. Compressor skids.
2. Dispensers.
3. Retrofitted Point I/O kits installed in existing equipment.
4. Modified gas dryer.
5. Valve panels.
6. Motor-starter panels.
7. Replacement master PLC control system.
8. Emergency-shutdown system.
9. Gas detection system.
10. Fire alarm system at each site (See related specifications).

B. Joint Vendor Meetings. Contractor shall facilitate joint, on-site meeting(s) consisting of technicians from the Contractor, Contractor's electrical subcontractor, Contractor's mechanical-piping subcontractor, CNG-skid manufacturer, dryer manufacturer, valve-panel manufacturer, dispenser manufacturer, and fuel-management vendor. First joint meeting shall be conducted upon completion of all mechanical connections, final terminations and energizing of all systems listed herein, for the purpose of coordinating debugging activities. Contractor shall facilitate as many such joint meetings as may be required to achieve final acceptance and test compliance as described under article 1.10 and article 3.06.

C. Repair and Maintenance Items. Prior to start of field work, the Contractor shall provide a complete list of repair and maintenance items to be assumed by the Contractor during construction for all CNG equipment and systems in scope of this contract, as well as a complete commissioning checklist that includes master PLC adjustments and point I/O's .

## 3.08 ADJUSTING, BALANCING AND TESTING

A. After completion of the installation, start, regulate, adjust and test all equipment and devices. Testing shall be witnessed by the Owner or approved Owner's representative.

B. Functional Tests.

1. Leak tests of high-pressure CNG piping sections, systems and appurtenances shall be performed by maintaining a nitrogen charge of 110 percent of its respective working pressure for a duration of 30 minutes with charge source disconnected. The tests shall use a gauge that is scaled to between 110 percent and 300 percent of the test pressure. Piping and tubing shall also be subject to soap-bubble testing. See Mechanical General notes for test procedure.

2. Functional Testing. At minimum, successful completion of the following functional tests shall be required.
   a. ESD / emergency shutdown at all button/station locations, including required valve closures.
   b. Low suction pressure, each skid (close skid-supply ball valves).

c. Temperature-compensated dispenser fill for each dispenser, including correct dispenser start on button, auto-stop on fill completion, and verify 'settled' fill pressure vs. ambient temperature two hours following fills. Must be within 4% of design-fill pressure, temperature compensated to 70ºF.
d. Correct operation of fuel-management system at each dispenser, including authorization of transaction, energizing of dispenser, and recording of transaction data (fill volume, time/date stamp, event ID, and pump number).
e. Manual initiation of dryer regeneration.
f. Correct annunciation on controller / PLC shall be required for all test events, as appropriate.
g. Observe compressor operation, including stage pressures and temperatures, and verifying function of controller, including triggering selected faults, such as high interstage temperature.

C. Reliability Test. Reliability test shall consist of fueling under normal-use conditions for 5 consecutive workdays. The reliability test shall be started to perform in presence of the Owner and shall be coordinated with Owner in writing at minimum of two working days in advance. System shall have no failures of compressor operation, dryer operation, normal dispenser operation, or operation of the fuel-management system during the test period. If any failure occurs, the test shall be repeated in its entirety. Final acceptance of the facility shall only be declared upon successful completion of the test. Contractor shall be responsible for all onsite coordination of troubleshooting and coordination of suppliers and trades during test.

1. Failure is defined as the occurrence of any of the following:
   a. Inability of the CNG system to dispense CNG at the pressures and rate specified, including accounting for temperature compensation at settled conditions.
   b. Failure of the dryer to provide dried gas or not be able to auto switch or regenerate as applicable.
   c. Failure of a compressor to start and run within factory-listed operating pressures and temperatures.
   d. Failure of the controller/PLC, valve panel, fuel-management system and/or dispensers to operate as specified.
   e. Presence of an audible or visible gas or CNG leak.
   f. Occurrence of an auto-fault shutdown of either or both CNG compressors, except those caused by ESD-button activation, gas-detection system outside of skids, variations in gas supply pressure, or damage to the facility beyond the Contractor's control.

2. Contractor may take equipment offline for scheduled maintenance during the test period, provided maintenance is consistent with manufacturer's recommendations, and does not impinge on Owner's ability to fuel vehicles during the normal daily fueling window between 7:00AM and 6:00PM. Contractor shall be responsible for maintenance through successful completion of test, including provision of consumables.

3. Corrective work conducted by the Contractor and all subcontractors and suppliers preceding and during the performance test shall be documented at the time of the repair by the technician performing the repair. If the technician suspects a cause of fault that is beyond the scope of his respective firm or responsibility, technician

shall notify Owner immediately and shall not implement repairs until condition of failure has been documented and the other firm(s) have been notified and been provided documentation of the condition. Owner shall not pay Contractor for any work or repair that is implemented during testing above of the contract amount, unless the work or condition is beyond the control of the Contractor, the Contractor's subcontractors, or the Contractor's suppliers. Contractor shall notify Owner in writing of intent to perform any work that the Contractor deems to be outside of the contract scope, prior to performance of any such work.

## 3.09 OPERATION AND MAINTENANCE DATA AND TRAINING

A. Maintenance Manuals: Organize maintenance and operating manual information into suitable sets of manageable size, and bind into individual binders, properly identified and indexed (thumb-tabbed). Examples: Dryer, CNG compressors, compressor drivers, CNG dispensers, etc. Include emergency instructions, safety procedures, spare parts listings, warranties, guarantee, wiring diagrams, recommended maintenance intervals, inspection procedures, shop drawings, product data, and similar applicable information. Use a standard method for highlighting safety procedures. Bind each manual of each set in a heavy-duty 2-inch, three ring vinyl-covered binder and include pocket folders for folded sheet information. Mark identification on both the front and spine of each binder, including "Volume ## of ##" information.

1. Data:
   a. Manuals shall cover the CNG facility as a complete system.
   b. Include instructions by manufacturer's representatives where installers are not expert in the required procedures.
      1) Review of maintenance manuals, record documentation, tools, spare parts and materials, lubricants, fuels, identification system, control sequences, hazards, cleaning, and similar procedures and facilities for operational equipment to demonstrate start-up, shut-down, emergency adjustments, and similar operations.
      2) Review of maintenance and operations in relation to applicable guarantees, warranties, agreements to maintain bonds, and similar continuing commitments.
2. Printed Copies: Supply three (3) complete copies of all manuals for approval with the commencement of the delivery of the equipment to the site.

3. Electronic Copies: Supply (3) complete and copies of manual in electronic PDF format, with matching content and organization vs. printed copies. PDF shall be text searchable and media shall be USB flash drive with label or tag.

B. CNG Fueling Operation and Maintenance Training.

1. General:
   a. At least 60 days prior to scheduled date for commencement of training, submit training syllabus with time allotments per topic and instructional materials to the Owner for review and approval. Upon review of syllabus, Owner may require additional time be allotted to certain training topics.
   b. Where specified, develop and conduct a program to train selected Owner personnel in the safe operating procedures, and maintenance of equipment and systems furnished during the hours required by the Owner. Also include

in the training program key hazards and their protectors, and corrective actions for violation of safety rules.

c. Furnish instructors, instructional materials and audio-visual aids and equipment.
d. The Owner is to furnish physical facilities and equipment.
e. Begin instruction upon successful completion of Testing as specified in this Section.

2. Program content: At a minimum, instruction will include material covered in the operation and maintenance manuals as well as the following:

a. Theory of operation of CNG system.
b. Practical aspects of operation.
c. Description of system, equipment and components.
d. Functional characteristics of system, equipment and components.
e. Emergency operating procedures.
f. Maintenance procedures.
g. Servicing intervals and schedules.
h. Diagnosis and problem solving (troubleshooting).
i. Repair.
j. All segments characterizing CNG equipment.
k. Instruction manual will contain measurable training objectives.
l. Hazards relative to CNG Facility operations.
m. Conduct preventive maintenance checks and services.
n. Perform general and location Emergency Response.
o. Perform personal precautions in Emergency Situations such as Fires, Leaks or Spills.
p. Perform corrective actions to respond to Emergency Situations such as Fires, Leaks or Spills.
q. Operations and Safety personnel will perform CNG Shop Operations such as Prepare Maintenance Request; Maintain Records for Hazard of CNG Operations.
r. Perform CNG vehicle fueling.
s. Operation, reading, interpretation and resetting of Murphy control panel.

C. Special tools or equipment.

1. Contractor will supply special tools or equipment.
   a. The special equipment or tools are defined as, other than those nominally found in a mechanic's toolbox, necessary for the general upkeep, maintenance and overhaul of the equipment or products contained in equipment and components delivered under this contract.
   b. A list of special tools or equipment will be provided to Owner. The list must be submitted for approval no later than 60 days after awarding contract.
   c. Any tools not found in the catalogue or over-the-counter of a local supply company is considered a specialty tool or equipment.

D. Duration.
1. Training for maintenance, facility operation and troubleshooting shall be 8 total hours. Entire training shall be videotaped, and said videos shall be provided to the Owner.

2. Actual durations for each type of training may be reduced at the discretion of the Owner.

E. Emergency response training.

1. Contractor shall provide emergency response training and facility familiarization to Fire Department personnel as related to faults that may occur during operation of the CNG system and during the fueling of CNG-fueled vehicles at all dispensers. Contractor shall provide up to two sessions lasting 45 minutes each, and shall include familiarization of overall facility layout and function, location of service disconnects for gas and electrical connections, and demonstration of ESD function.

## 4 - MODIFICATIONS TO EXISTING EQUIPMENT

### 4.01 GENERAL

A. Description. Work referenced under Part 4 relate to existing equipment and systems at the two CNG fueling facilities that require modification.

B. Scope. The work listed under Part 4 is not all inclusive. The Contractor shall verify all equipment and systems needing modification as indicated in the construction documents and shall modify the items as needed.

### 4.02 WORK REQUIRED AT IBMF

A. Relocation of CNG Compressor Skid. Decommission, disconnect and relocate the simplex 350 HP CNG compressor skid at SMF and relocate to IBMF. Install and re-commission skid at IBMF.

B. Upgrade of Paratransit Dispensers. All work under this item shall be performed by a technician authorized by the dispenser manufacturer to retrofit dispensers, and all work shall be performed in the field, unless authorized otherwise by the Owner.

1. Process Size. Upgrade the (3) ANGI CNG dispensers installed in Phase A by retrofitting their internal process lines to minimum ¾” x 1.04” SS lines (5000 PSI MAWP). All manual and automatic ball valves shall be upgraded to line size. Process sequence shall match existing process. Preserve and restore metering, filtration and pressure indicators.

2. Auxiliary Hose. Downstream of meter and all process-ball valves, provide a minimum ¾” SS tubing tee and SS line to supply an auxiliary hose. Hose shall be ¾” x 12’ w/ Siamese vent and include OPW ILB5 breakaway fitting on supply line and ILB1 breakaway on the vent line. Provide with CT5000 fill nozzle.

C. Re-route Defuel Piping. Re-route discharge piping from defueler over new wall that will be installed as part of this contract. Relocate defuel assembly and provide new footing, if required by final location of wall. Piping shall be fabricated from sch 40 CS pipe and

be supported at max. spans of 12' O.C. Re-connect to main suction pipe as shown on drawings.

D. Retrofit Vibration Sensors. Install analog vibration sensors on all CNG-compressor skids installed prior to Phase A and connect to analog landing at existing I/O Module in each skid. Modify PLC program to read and display sensors and set threshold for shutdown at ≥ 0.8" per second. See specification paragraph 2.02.F for added requirements.

E. Remove Skid Enclosures. Remove all side and roof skid-enclosure panels on all CNG-compressor skids installed prior to Phase A. Removal shall be done with minimum of cutting and shall leave the skids in neat and clean condition and with de-burred edges. Discard panels.

F. Methane-Leak Sensors Fueling Canopy.

1. Install point-type infrared methane-leak sensors under fuel-island canopy at fixed route and paratransit fueling areas. Install one sensor directly above each CNG dispenser location. Sensors shall be installed within 12" of the ceiling and shall be manufactured by Sierra Monitor, and match the methane sensors installed elsewhere at the site.

2. Install new Allen Bradley analog Modbus I/O card at master PLC for connecting up to two gas detection Modbus data lines. Disconnect existing Modbus wire from 'Red Lion' display for monitoring existing gas-leak detectors at compressor-equipment canopy and re-connect wire to new Modbus card. Reprogram PLC as required to supervise revised and added leak-detector configuration.

3. Wire homerun Modbus 4-20mA signal from new paratransit-area detectors to new Modbus I/O card. Wire Modbus 4-20mA signal from new fixed-route area detectors to existing leak-detector string at canopy of compressor-equipment area. Program PLC to monitor and display methane readings for each sensor by address/location. Configure PLC to annunciate a gas-leak warning at 20% of LFL, and to shutdown the CNG station if concentrations above 40% of LFL for methane are detected at any sensor.

4.03 WORK REQUIRED AT SMF

A. Relocation of CNG Compressor Skid. Decommission, disconnect and relocate the simplex 350 HP CNG compressor skid at SMF and relocate to IBMF. See paragraph 4.02.A.

B. Reorient Dispenser Displays. Rotate dispenser heads at (4) south-most dispensers (all installed prior to Phase A), so that their displays face 180º from their current orientation. If re-orienting the displays is not possible, disconnect, remove and reorient entire dispenser as needed to rotate their displays.

C. Reconfigure Valve Panel Jbox. Revise layout of jbox that protrudes from the valve panel near the CMU wall by shortening the conduits into the valve panel and modifying the support struts. Includes temporary un-termination of wires in conduits and,

shortening wires and re-terminating wires as required. Jbox shall be re-mounted such that it is no more than a 2” gap between the jbox and the valve-panel cabinet.

D. Retrofit Vibration Sensors. Install analog vibration sensors on all CNG-compressor skids installed prior to Phase A and connect to analog landing at existing I/O Module in each skid. Modify PLC program to read and display sensors and set threshold for shutdown at ≥ 0.8” per second. See specification paragraph 2.02.F for added requirements.

E. Remove Skid Enclosures. Remove all side and roof skid-enclosure panels on all CNG-compressor skids installed prior to Phase A. Removal shall be done with minimum of cutting and shall leave the skids in neat and clean condition and with de-burred edges. Discard panels.

F. Methane-Leak Sensors Fueling Canopy.

1. Install point-type infrared methane-leak sensors under fuel-island canopy at fixed route and paratransit fueling areas. Install one sensor directly above each CNG dispenser location. Sensors shall be installed within 12” of the ceiling and shall be manufactured by Sierra Monitor, and match the methane sensors installed elsewhere at the site.

2. Install new Allen Bradley analog Modbus I/O card at master PLC for connecting up to two gas detection Modbus data lines. Disconnect existing Modbus wire from ‘Red Lion’ display for monitoring existing gas-leak detectors at compressor-equipment canopy and re-connect wire to new Modbus card. Reprogram PLC as required to supervise revised and added leak-detector configuration.

3. Wire homerun Modbus 4-20mA signal to new Modbus I/O card. Program PLC to monitor and display methane readings for each sensor by address/location. Configure PLC to annunciate a gas-leak warning at 20% of LFL, and to shutdown the CNG station if concentrations above 40% of LFL for methane are detected at any sensor.

END OF CNG EQUIPMENT & SYSTEMS

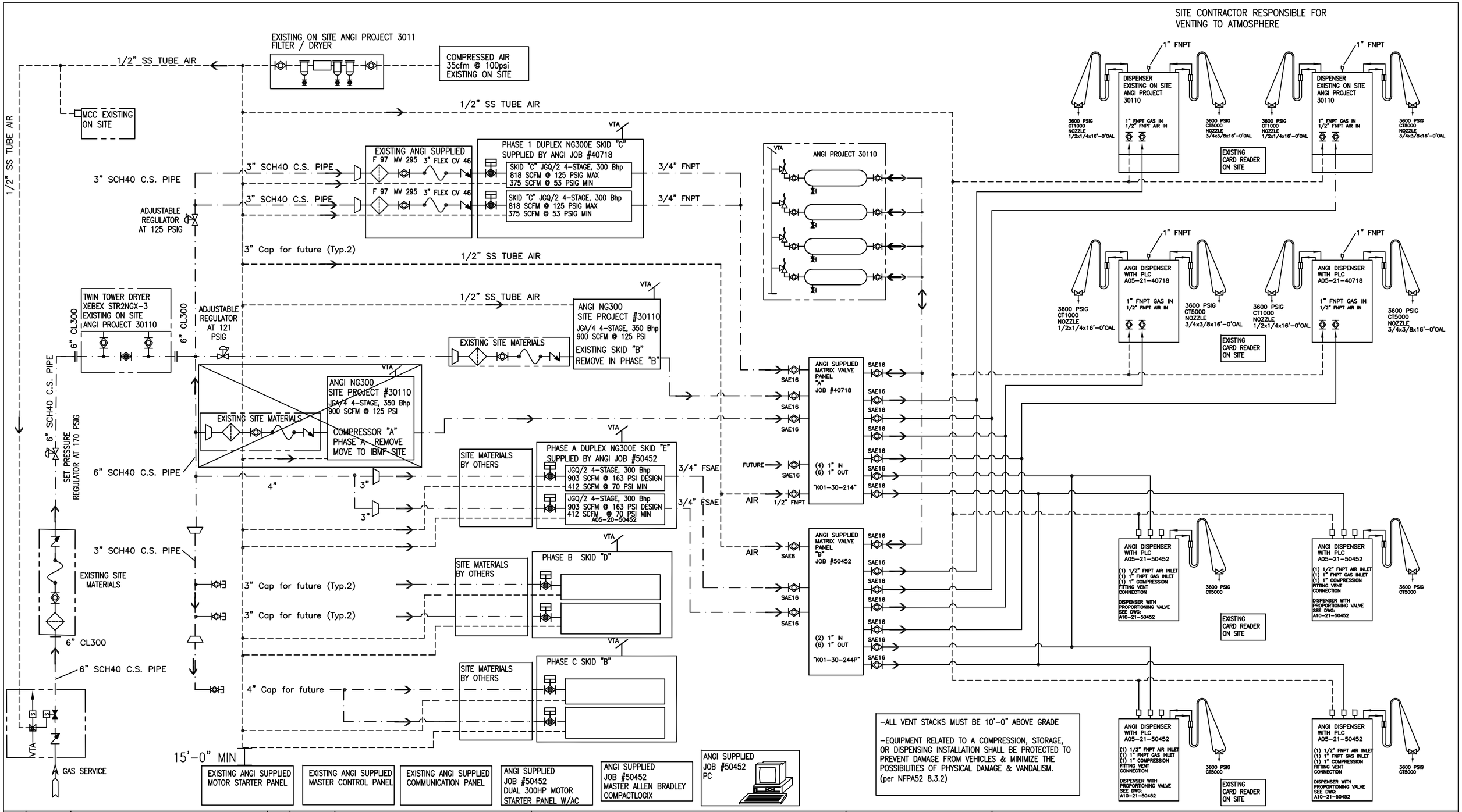


-ALL VENT STACKS MUST BE 10'-0" ABOVE GRADE

-EQUIPMENT RELATED TO A COMPRESSION, STORAGE, OR DISPENSING INSTALLATION SHALL BE PROTECTED TO PREVENT DAMAGE FROM VEHICLES & MINIMIZE THE POSSIBILITIES OF PHYSICAL DAMAGE & VANDALISM. (per NFPA52 8.3.2)

| REV | DATE/BY | DESCRIPTION | REV | DATE/BY | DESCRIPTION |
|---|---|---|---|---|---|
| B | 2/1/17 JKM | Updated line to the dryer to 6" Updated (E) dispensers to show 3600 psi | B | 2/1/17 JKM | Added note (N) dispenser w/proportioning valve see DWG A10-21-50452 |
| A | 12/7/16 JKM | Update 4" piping to and from gas dryer with 6" | B | 2/1/17 JKM | Added stub-outs for future compressors |
| A | 12/7/16 JKM | Add (E) Skid B and Skid E labeling | C | 5/23/17 JKM | Update per customers comments |
| A | 12/7/16 JKM | Update 4" piping to and from gas dryer with 6" | | | |

ANGI

ANGI ENERGY SYSTEMS
305 W DELAVAN DR
JANESVILLE, WI 53546
PH: 608-563-2800
www.angienergy.com



UNLESS OTHERWISE SPECIFIED
BREAK SHARP EDGES
ALL DIMENSIONS IN INCHES

| | |
|---|---|
| FRACTIONAL | ±1/8 |
| TWO PLACE DECIMAL | ±.010 |
| THREE PLACE DECIMAL | ±.005 |
| ANGLES | ±1° |

| | | | |
|---|---|---|---|
| TITLE | SITE P&ID SMF | | |
| CUSTOMER | Trillium – RTC Las Vegas – SMF | PROJECT NO. | 50452 |
| SHEET | 1 OF 1 | SCALE | NA |
| DRAWN BY | JKM | DATE | 11/10/16 |
| DRAWING NO. | A00-01-50452 | REV. | C |

AUTOCAD JDRIVE WINDCHILL

NOTES:

1. DIMENSIONS AND TOLERANCES IN ACCORDANCE WITH ASME Y14.5M-2009.
2. ITEM NOT SHOWN.
3. SPARE GASKET, USE AS NEEDED.
4. MINIMUM BEND RADIUS: 22"
   MAX LATERAL OFFSET: 1"

| ITEM | QTY | NAME | DESCRIPTION | RAW MATERIAL | MATERIAL SPEC | LENGTH |
|---|---|---|---|---|---|---|
| 3 | 1 | 350-07264 | CONN-FLEX 3x18OAL CL150xCL300 450# SS BODY | | | |
| 4 | 4 | 724-07238 | GASKET-FLG SPIRO 3 CL150 | | | |
| 5 | 3 | 724-07239 | GASKET-FLG SPIRO 3 CL300/400/6 | | | |
| 6 | 1 | 770-07385 | STRAINER-BASKET TYPETB 3 CL150/300/600 | | | |
| 7 | 1 | 710-07560 | O'RING KIT - SAE - 2 THRU 24 | | | |
| 8 | 1 | 710-07561 | O'RING KIT-SEAL LOK FACE 1/4 THRU 11/2 ORFS | | | |
| 9 | 1 | 334-07505 | VALVE-BALL SVF 3 CL150 B4146 MV295 | - | - | |
| 10 | 1 | 336-07257 | VALVE-CHECK KF 3 CL300 WAFER SWING(CV46) | | | |
| 11 | 8 | 303-07401 | STUD-THRD 3/4-10x8 (8-1/4OAL) A193 B7 YELLOW ZINC FULL THREAD | ALLOY STEEL | ASTM A193 B7 | |
| 12 | 16 | 222-07271 | NUT-HEX 5/8-11 HEAVY A194 2-H YELLOW ZINC PLATED | STEEL | ASTM A194 2H | |
| 13 | 16 | 222-07272 | NUT-HEX 3/4-10 HEAVY A194 2-H YELLOW ZINC PLATED | STEEL | ASTM A194 SH | |
| 14 | 8 | 303-07407 | STUD-THRD 3/4-10x8 (8-1/4OAL) A193 B7 YELLOW ZINC FULL THREAD | ALLOY STEEL | ASTM A193 B7 | |

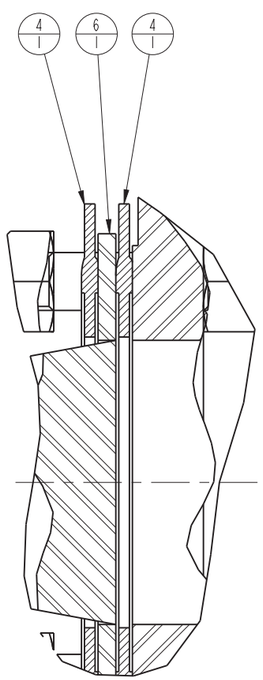

DETAIL A
SCALE 1.250

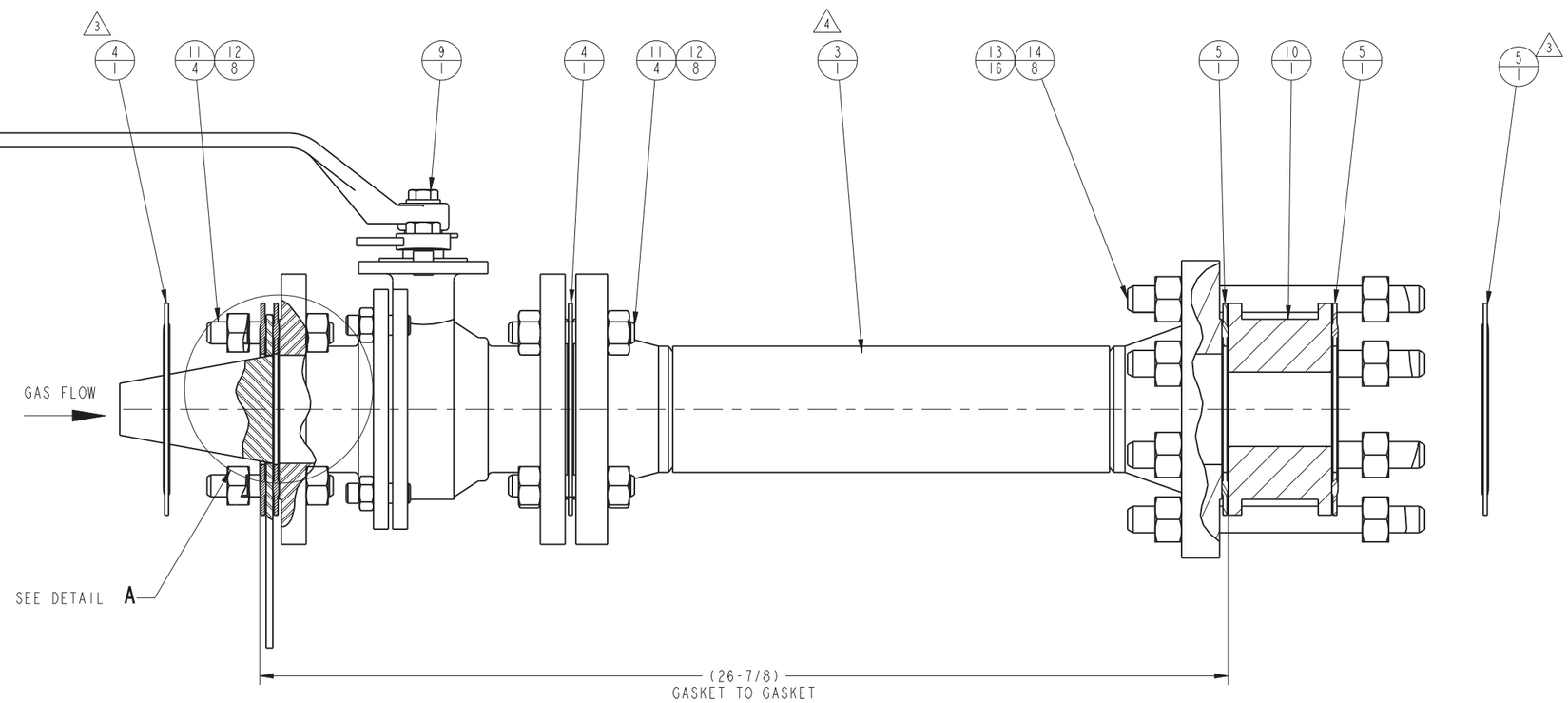


| REV | DATE | APPROVED | DESCRIPTION |
|---|---|---|---|
| E | 06/12/2015 | JFO | ADDED & MISSING #13 ITEMS, CN01878 |
| D | 06/05/2015 | JFO | REPLACE HARDWARE ITEMS #11,12,13,14; CN01841 |
| C | 03/23/2015 | JFO | REPLACE ITEMS #9,10,11,14; CN01400 |
| B | 09/02/2014 | M.WELLER | MARK WELLER UPDATE TO AX; CN00516 |
| A | 04/03/2013 | A.MOEN | ALAN MOEN UPDATE TO AX; 130404-02 |

ANGI ENERGY SYSTEMS
305 W DELAVAN DR
JANESVILLE, WI 53546
PH: 608-563-2800
www.angienergy.com



UNLESS OTHERWISE SPECIFIED
BREAK SHARP EDGES .005 -.015
ALL DIMENSIONS IN INCHES
FRACTIONAL ± 1/8
TWO PLACE DECIMAL ±.010
THREE PLACE DECIMAL ±.005
ANGLES ± 1°

TITLE: SITE MATERIALS-STANDARD 3" CL300xCL150 INLET
CUSTOMER
PROJECT NO.
SHEET: 1 of 1
SCALE: 0.500
DRAWN BY: MWELLER
DATE: 9/30/2014
DRAWING NO.: X10-10-025
REV.: E

ANGI™

## DRAWING INDEX



## EQUIPMENT LEGEND

| CODE | PANEL DESCRIPTION |
|---|---|
| | – NEW EQUIPMENT – |
| P12 | MASTER CONTROL PANEL |
| P23 | DUPLEX COMPRESSOR SKID 'E' |
| P53 | MOTOR STARTER PANEL 'MSE' |
| D5 | PLC DISPENSER 5 |
| D6 | PLC DISPENSER 6 |
| D7 | PLC DISPENSER 7 |
| D8 | PLC DISPENSER 8 |
| VP2 | VALVE PANEL 2 |
| | – EXISTING EQUIPMENT TO BE UPGRADED (REMOTE I:O)– |
| P1B | SIMPLEX COMPRESSOR SKID 'B' |
| P1C | DUPLEX COMPRESSOR SKID 'C' |
| P5B | MOTOR STARTER PANEL 'MSB' |
| VP1 | VALVE PANEL 1 |
| | – EXISTING EQUIPMENT – |
| P01 | UPS PANEL |
| P4 | CP400 COMMUNICATIONS PANEL |

ALLOW FOR 10% SPARE CONDUCTORS IN ALL CONDUITS

| REV | DATE/BY | DESCRIPTION | REV | DATE/BY | DESCRIPTION |
|---|---|---|---|---|---|
| D | 1/20/17 MWS | ECN# CN04473 UPDATED DISPENSER FEEDS | H | 1/30/117 MWS | REVISED TITLEBLOCK SHEET NUMBERS |
| C | 1/11/17 MWS | (CR) MAIN MOTOR CONDUCTOR SIZE (CR) PRE–LUBE MOTOR CONDUCTOR SIZE | G | 1/30/17 MWS | CN# CN04508 CHANGES PER CUSTOMER REVIEW |
| K | 4/5/17 MWS | REVISED AS PER CUSTOMER REDLINES | F | 1/27/17 MWS | ECN# CN04503 CHANGES PER CUSTOMER REVIEW |
| J | 3/29/17 MWS | REVISED AS PER CUSTOMER REDLINES | E | 1/26/17 MWS | ECN# CN04499 CHANGES PER CUSTOMER REVIEW |

ALL ELECTRICAL CONNECTIONS MUST BE COMPLETED OR SUPERVISED BY QUALIFIED PERSONNEL, AND MEET ALL LOCAL AND APPLICABLE CODES. REFER TO NEC FOR MORE INFORMATION.



ANGI ENERGY SYSTEMS
305 W DELAVAN DR
JANESVILLE, WI 53546
PH: 608–563–2800
www.angienergy.com

CONTROLLED DRAWING
THIS DRAWING COMPLIES WITH AGENCY LISTINGS. DO NOT CHANGE WITHOUT APPROVAL FROM ENGINEERING DEPARTMENT.

| | | | | |
|---|---|---|---|---|
| TITLE | CONDUIT/CUSTOMER INTERCONNECT DETAILS INDEX AND GENERAL INFORMATION | | | |
| CUSTOMER | Trillium – RTC Las Vegas – SMF | PROJECT NO. | 50452 | |
| DRN MWS | DATE 11/8/16 | SCALE 1:1 | DRAWING NO. A80–50–50452 | REV. K |
| CHK – | DATE – | SHT 1 | TOT 10 | |

AUTOCAD WINDCHIL

# NEW DUPLEX COMPRESSOR SKID 'E' INTERCONNECT

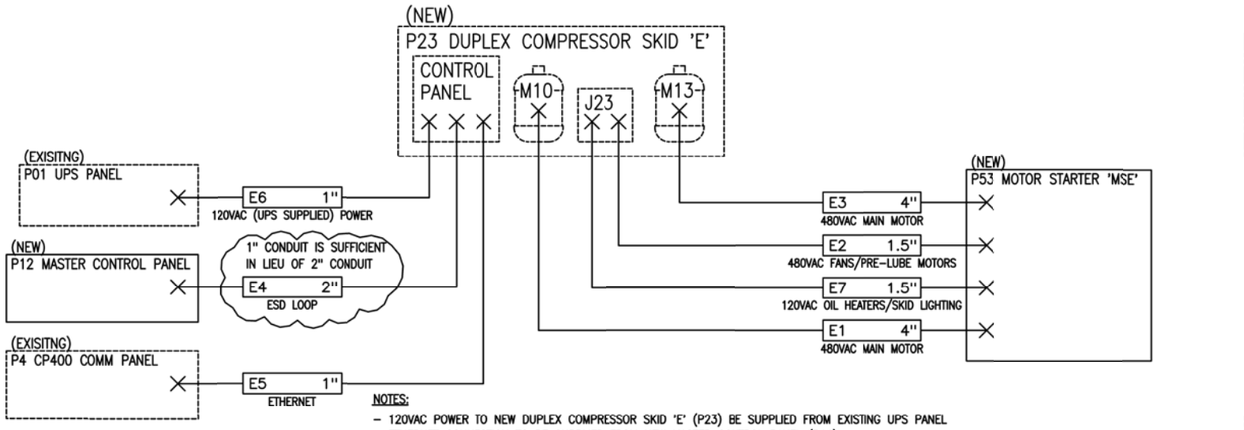


NOTES:

- 120VAC POWER TO NEW DUPLEX COMPRESSOR SKID 'E' (P23) BE SUPPLIED FROM EXISTING UPS PANEL
- ETHERNET CONNECTION TO BE SUPPLIED FROM NEW MASTER CONTROL PANEL (P11)
- 120VAC OIL HEATER POWER AND COMPRESSOR SKID 'E' LIGHTING TO BE SUPPLIED FROM NEW MOTOR STARTER PANEL 'MSE' (P53)
- 480VAC POWER TO COOLING FANS AND PRE-LUBE MOTORS TO BE SUPPLIED FROM NEW MOTOR STARTER PANEL 'MSE' (P53)
- 480VAC POWER TO MAIN MOTORS (M10, M13) TO BE SUPPLIED FROM NEW MOTOR STARTER PANEL 'MSE' (P53)
- ETHERNET CONNECTION TO NEW MOTOR STARTER PANEL 'MSE' (P53) TO BE SUPPLIED FROM EXISTING CP-400 (P4) AND EXTEND TO NEW MASTER CONTROL PANEL (P11) MANAGED ETHERNET SWITCH

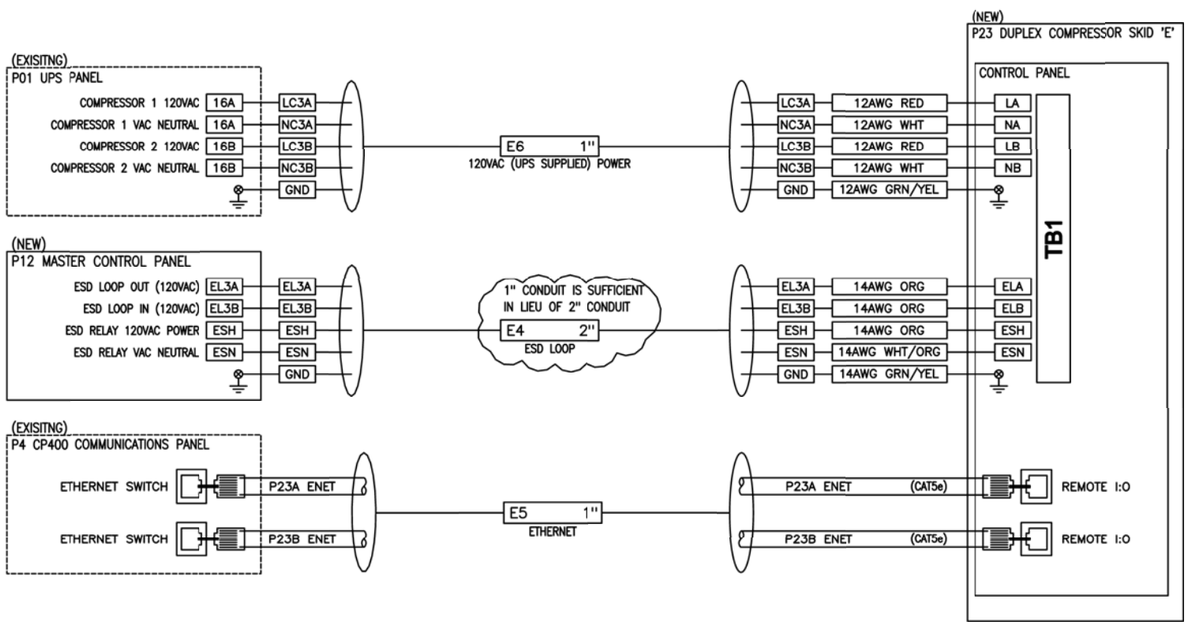


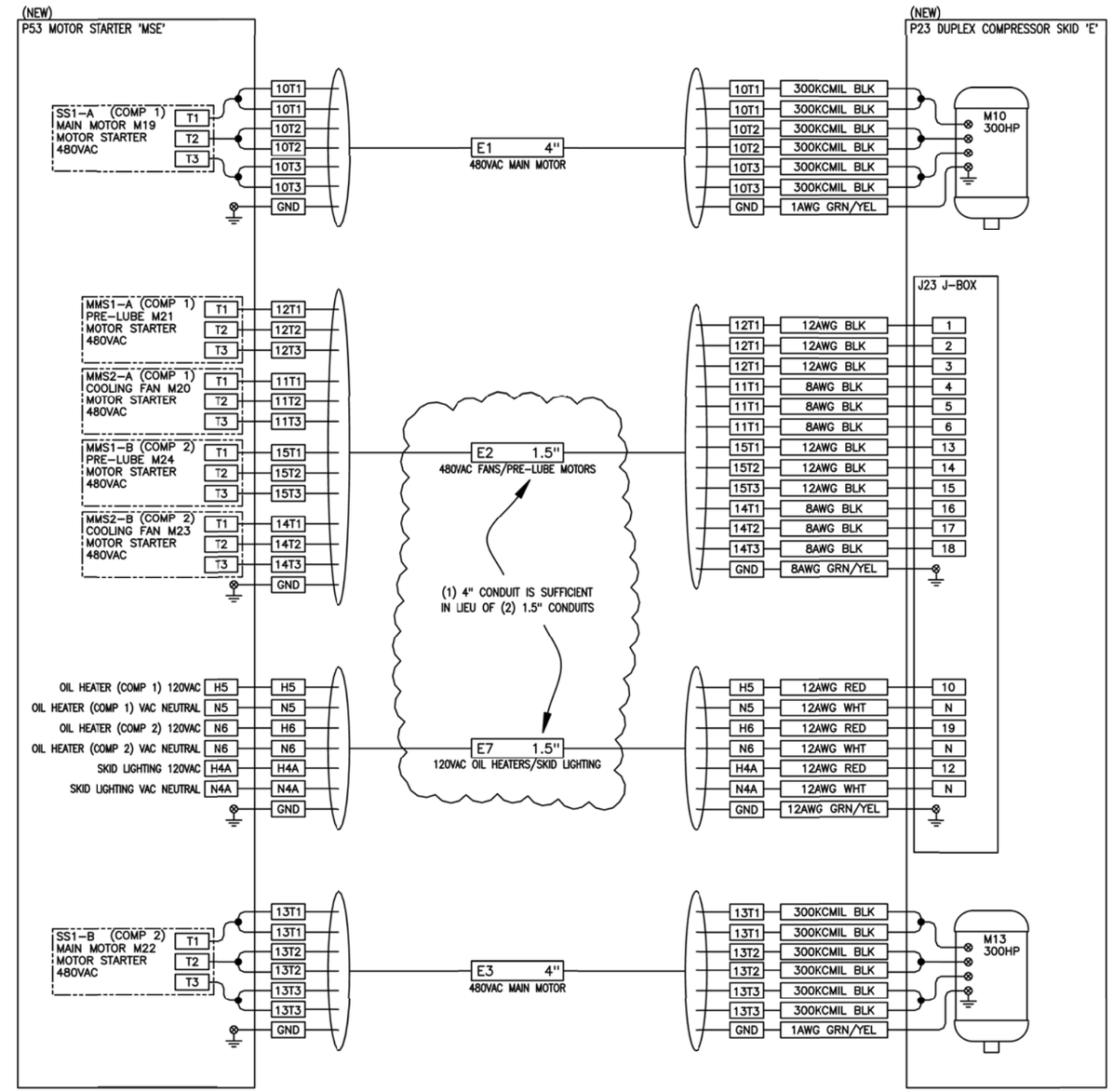


ALLOW FOR 10% SPARE CONDUCTORS IN ALL CONDUITS

| REV | DATE/BY | DESCRIPTION | REV | DATE/BY | DESCRIPTION |
|---|---|---|---|---|---|
| D | 1/20/17 MWS | ECN# CN04473 UPDATED DISPENSER FEEDS | H | 1/30/117 MWS | REVISED TITLEBLOCK SHEET NUMBERS |
| C | 1/11/17 MWS | (CR) MAIN MOTOR CONDUCTOR SIZE (CR) PRE-LUBE MOTOR CONDUCTOR SIZE | G | 1/30/17 MWS | CN# CN04508 CHANGES PER CUSTOMER REVIEW |
| K | 4/5/17 MWS | REVISED AS PER CUSTOMER REDLINES | F | 1/27/17 MWS | ECN# CN04503 CHANGES PER CUSTOMER REVIEW |
| J | 3/29/17 MWS | REVISED AS PER CUSTOMER REDLINES | E | 1/26/17 MWS | ECN# CN04499 CHANGES PER CUSTOMER REVIEW |

ALL ELECTRICAL CONNECTIONS MUST BE COMPLETED OR SUPERVISED BY QUALIFIED PERSONNEL, AND MEET ALL LOCAL AND APPLICABLE CODES. REFER TO NEC FOR MORE INFORMATION.



ANGI ENERGY SYSTEMS
305 W DELAVAN DR
JANESVILLE, WI 53546
PH: 608-563-2800
www.angienergy.com

CONTROLLED DRAWING

THIS DRAWING COMPLIES WITH AGENCY LISTINGS. DO NOT CHANGE WITHOUT APPROVAL FROM ENGINEERING DEPARTMENT.

TITLE: CONDUIT/CUSTOMER INTERCONNECT DETAILS
NEW DUPLEX SKID 'E'/MOTOR STARTER PANEL 'MSE' INTERCONNECT

| | | | |
|---|---|---|---|
| CUSTOMER | Trillium – RTC Las Vegas – SMF | PROJECT NO. | 50452 |
| DRN MWS | DATE 11/8/16 | SCALE 1:1 | DRAWING NO. A80-50-50452 |
| CHK – | DATE – | SHT 2 TOT 10 | REV. K |

AUTOCAD WINDCHIL

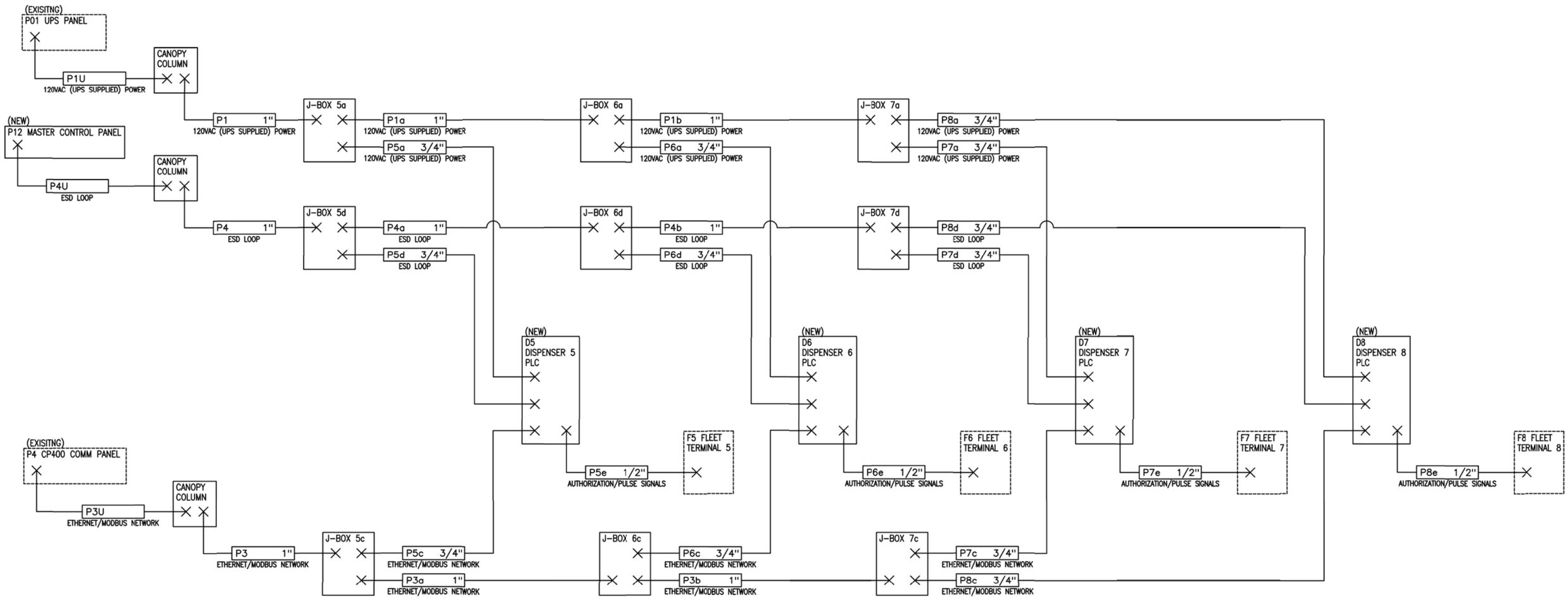


DISPENSER DESIGN ALLOWS FOR A MAXIMUM OF (3) 3/4" AND (1) 1/2" CONDUITS

ALLOW FOR 10% SPARE CONDUCTORS IN ALL CONDUITS

| REV | DATE/BY | DESCRIPTION | REV | DATE/BY | DESCRIPTION |
|---|---|---|---|---|---|
| D | 1/20/17 MWS | ECN# CN04473 UPDATED DISPENSER FEEDS | H | 1/30/117 MWS | REVISED TITLEBLOCK SHEET NUMBERS |
| C | 1/11/17 MWS | (CR) MAIN MOTOR CONDUCTOR SIZE (CR) PRE-LUBE MOTOR CONDUCTOR SIZE | G | 1/30/17 MWS | CN# CN04508 CHANGES PER CUSTOMER REVIEW |
| K | 4/5/17 MWS | REVISED AS PER CUSTOMER REDLINES | F | 1/27/17 MWS | ECN# CN04503 CHANGES PER CUSTOMER REVIEW |
| J | 3/29/17 MWS | REVISED AS PER CUSTOMER REDLINES | E | 1/26/17 MWS | ECN# CN04499 CHANGES PER CUSTOMER REVIEW |

ALL ELECTRICAL CONNECTIONS MUST BE COMPLETED OR SUPERVISED BY QUALIFIED PERSONNEL, AND MEET ALL LOCAL AND APPLICABLE CODES. REFER TO NEC FOR MORE INFORMATION.



ANGI ENERGY SYSTEMS
305 W DELAVAN DR
JANESVILLE, WI 53546
PH: 608-563-2800
www.angienergy.com

CONTROLLED DRAWING
THIS DRAWING COMPLIES WITH AGENCY LISTINGS. DO NOT CHANGE WITHOUT APPROVAL FROM ENGINEERING DEPARTMENT.

| | | | | |
|---|---|---|---|---|
| TITLE | CONDUIT/CUSTOMER INTERCONNECT DETAILS NEW PLC DISPENSERS INTERCONNECT | | | |
| CUSTOMER | Trillium – RTC Las Vegas – SMF | PROJECT NO. | 50452 | |
| DRN MWS | DATE 11/8/16 | SCALE 1:1 | DRAWING NO. A80-50-50452 | REV. K |
| CHK – | DATE – | SHT 3 TOT 10 | | |

AUTOCAD WINDCHIL

# NEW PLC DISPENSER ETHERNET/MODBUS NETWORK

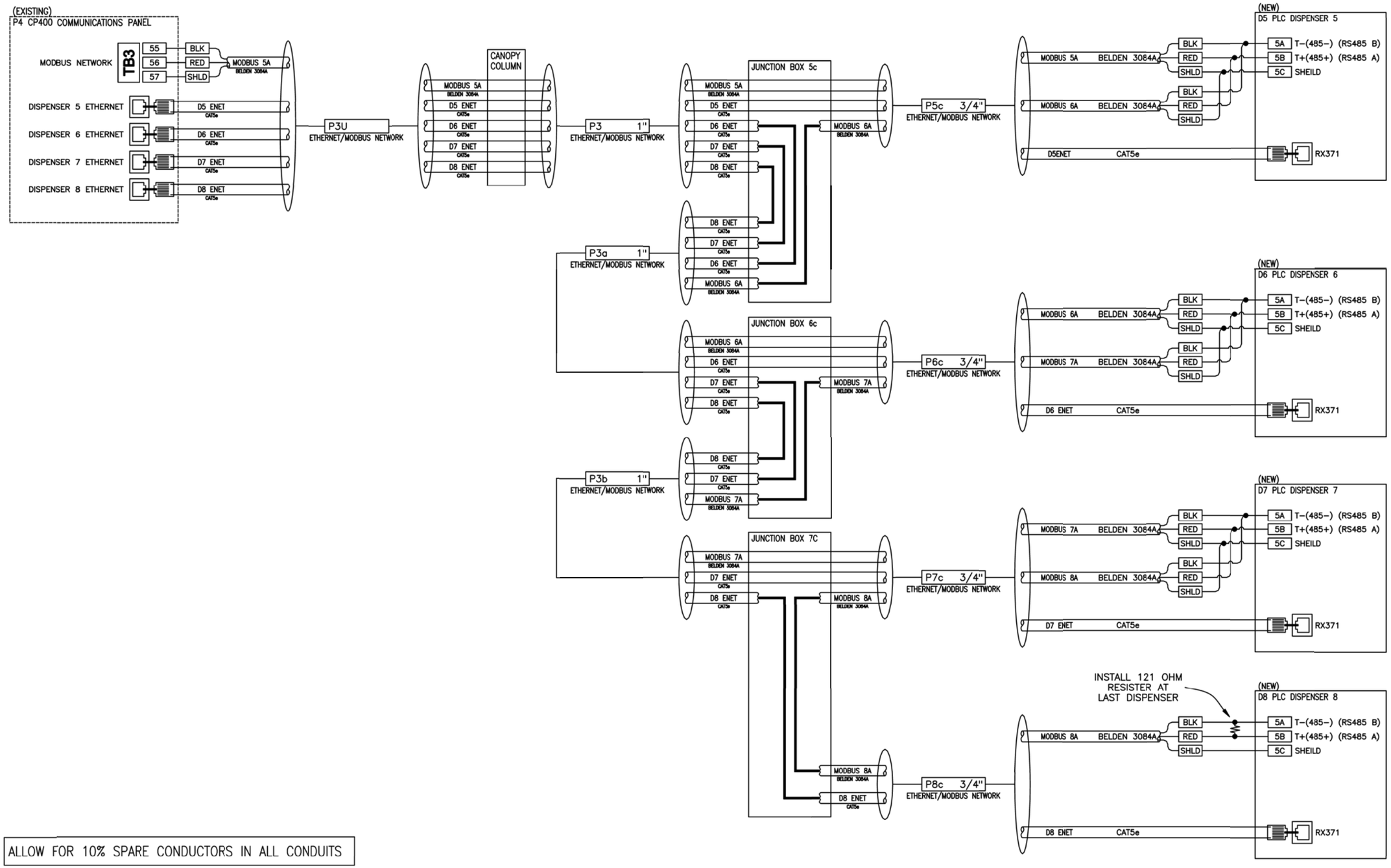


ALLOW FOR 10% SPARE CONDUCTORS IN ALL CONDUITS

| REV | DATE/BY | DESCRIPTION | REV | DATE/BY | DESCRIPTION |
|---|---|---|---|---|---|
| D | 1/20/17 MWS | ECN# CN04473 UPDATED DISPENSER FEEDS | H | 1/30/117 MWS | REVISED TITLEBLOCK SHEET NUMBERS |
| C | 1/11/17 MWS | (CR) MAIN MOTOR CONDUCTOR SIZE (CR) PRE-LUBE MOTOR CONDUCTOR SIZE | G | 1/30/17 MWS | CN# CN04508 CHANGES PER CUSTOMER REVIEW |
| K | 4/5/17 MWS | REVISED AS PER CUSTOMER REDLINES | F | 1/27/17 MWS | ECN# CN04503 CHANGES PER CUSTOMER REVIEW |
| J | 3/29/17 MWS | REVISED AS PER CUSTOMER REDLINES | E | 1/26/17 MWS | ECN# CN04499 CHANGES PER CUSTOMER REVIEW |

ALL ELECTRICAL CONNECTIONS MUST BE COMPLETED OR SUPERVISED BY QUALIFIED PERSONNEL, AND MEET ALL LOCAL AND APPLICABLE CODES. REFER TO NEC FOR MORE INFORMATION.



ANGI ENERGY SYSTEMS
305 W DELAVAN DR
JANESVILLE, WI 53546
PH: 608-563-2800
www.angienergy.com

CONTROLLED DRAWING

THIS DRAWING COMPLIES WITH AGENCY LISTINGS. DO NOT CHANGE WITHOUT APPROVAL FROM ENGINEERING DEPARTMENT.

TITLE: CONDUIT/CUSTOMER INTERCONNECT DETAILS NEW PLC DISPENSERS ETHERNET/MODBUS NETWORK

| | | | |
|---|---|---|---|
| CUSTOMER | Trillium – RTC Las Vegas – SMF | PROJECT NO. | 50452 |
| DRN MWS | DATE 11/8/16 | SCALE 1:1 | DRAWING NO. A80-50-50452 |
| CHK – | DATE – | SHT 4 TOT 10 | REV. K |

AUTOCAD WINDCHIL

# NEW PLC DISPENSER 120VAC POWER

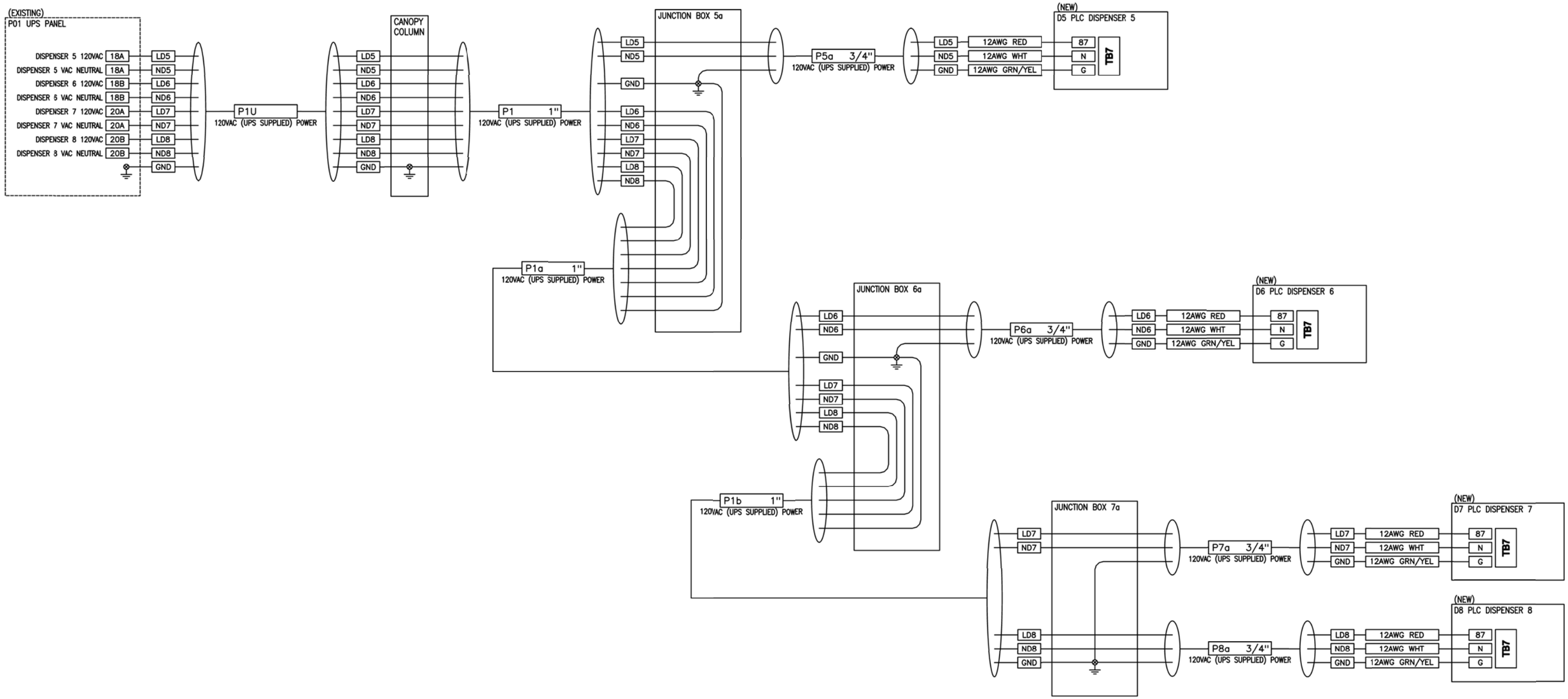


ALLOW FOR 10% SPARE CONDUCTORS IN ALL CONDUITS

| REV | DATE/BY | DESCRIPTION | REV | DATE/BY | DESCRIPTION |
|---|---|---|---|---|---|
| D | 1/20/17 MWS | ECN# CN04473 UPDATED DISPENSER FEEDS | H | 1/30/117 MWS | REVISED TITLEBLOCK SHEET NUMBERS |
| C | 1/11/17 MWS | (CR) MAIN MOTOR CONDUCTOR SIZE (CR) PRE-LUBE MOTOR CONDUCTOR SIZE | G | 1/30/17 MWS | CN# CN04508 CHANGES PER CUSTOMER REVIEW |
| K | 4/5/17 MWS | REVISED AS PER CUSTOMER REDLINES | F | 1/27/17 MWS | ECN# CN04503 CHANGES PER CUSTOMER REVIEW |
| J | 3/29/17 MWS | REVISED AS PER CUSTOMER REDLINES | E | 1/26/17 MWS | ECN# CN04499 CHANGES PER CUSTOMER REVIEW |

ALL ELECTRICAL CONNECTIONS MUST BE COMPLETED OR SUPERVISED BY QUALIFIED PERSONNEL, AND MEET ALL LOCAL AND APPLICABLE CODES. REFER TO NEC FOR MORE INFORMATION.



ANGI ENERGY SYSTEMS
305 W DELAVAN DR
JANESVILLE, WI 53546
PH: 608-563-2800
www.angienergy.com

CONTROLLED DRAWING
THIS DRAWING COMPLIES WITH AGENCY LISTINGS. DO NOT CHANGE WITHOUT APPROVAL FROM ENGINEERING DEPARTMENT.

TITLE: CONDUIT/CUSTOMER INTERCONNECT DETAILS NEW PLC DISPENSERS 120VAC POWER

CUSTOMER: Trillium – RTC Las Vegas – SMF | PROJECT NO. 50452

DRN MWS | DATE 11/8/16 | SCALE 1:1 | DRAWING NO. A80-50-50452 | REV. K

CHK – | DATE – | SHT 5 | TOT 10

AUTOCAD WINDCHIL

# NEW PLC DISPENSER ESD LOOP

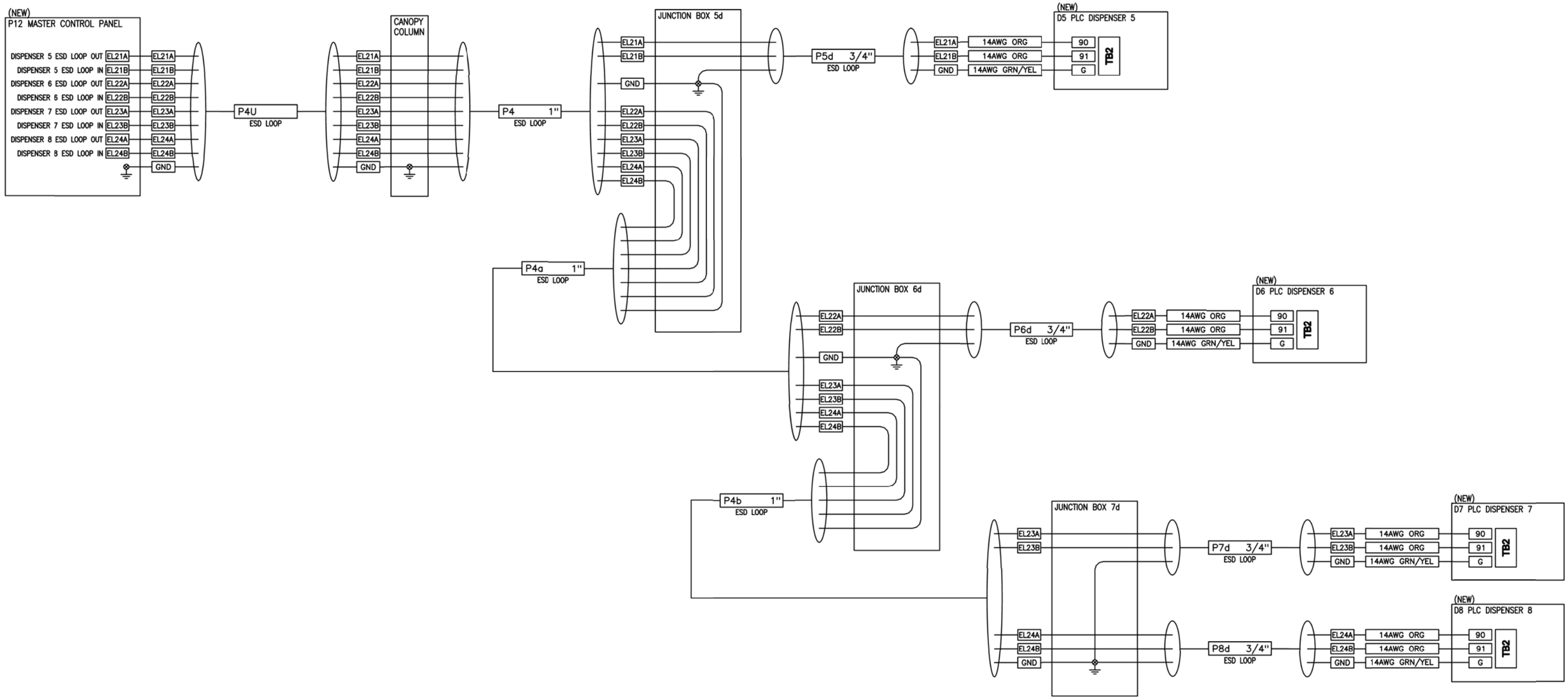


ALLOW FOR 10% SPARE CONDUCTORS IN ALL CONDUITS

| REV | DATE/BY | DESCRIPTION | REV | DATE/BY | DESCRIPTION |
|---|---|---|---|---|---|
| D | 1/20/17 MWS | ECN# CN04473 UPDATED DISPENSER FEEDS | H | 1/30/117 MWS | REVISED TITLEBLOCK SHEET NUMBERS |
| C | 1/11/17 MWS | (CR) MAIN MOTOR CONDUCTOR SIZE (CR) PRE-LUBE MOTOR CONDUCTOR SIZE | G | 1/30/17 MWS | CN# CN04508 CHANGES PER CUSTOMER REVIEW |
| K | 4/5/17 MWS | REVISED AS PER CUSTOMER REDLINES | F | 1/27/17 MWS | ECN# CN04503 CHANGES PER CUSTOMER REVIEW |
| J | 3/29/17 MWS | REVISED AS PER CUSTOMER REDLINES | E | 1/26/17 MWS | ECN# CN04499 CHANGES PER CUSTOMER REVIEW |

ALL ELECTRICAL CONNECTIONS MUST BE COMPLETED OR SUPERVISED BY QUALIFIED PERSONNEL, AND MEET ALL LOCAL AND APPLICABLE CODES. REFER TO NEC FOR MORE INFORMATION.



ANGI ENERGY SYSTEMS
305 W DELAVAN DR
JANESVILLE, WI 53546
PH: 608-563-2800
www.angienergy.com

CONTROLLED DRAWING
THIS DRAWING COMPLIES WITH AGENCY LISTINGS. DO NOT CHANGE WITHOUT APPROVAL FROM ENGINEERING DEPARTMENT.

TITLE: CONDUIT/CUSTOMER INTERCONNECT DETAILS NEW PLC DISPENSERS ESD LOOP

CUSTOMER: Trillium – RTC Las Vegas – SMF | PROJECT NO. 50452

DRN MWS | DATE 11/8/16 | SCALE 1:1 | DRAWING NO. A80-50-50452 | REV. K

CHK – | DATE – | SHT 6 | TOT 10

AUTOCAD WINDCHIL

# NEW PLC DISPENSER FLEET TERMIANL INTERCONECT

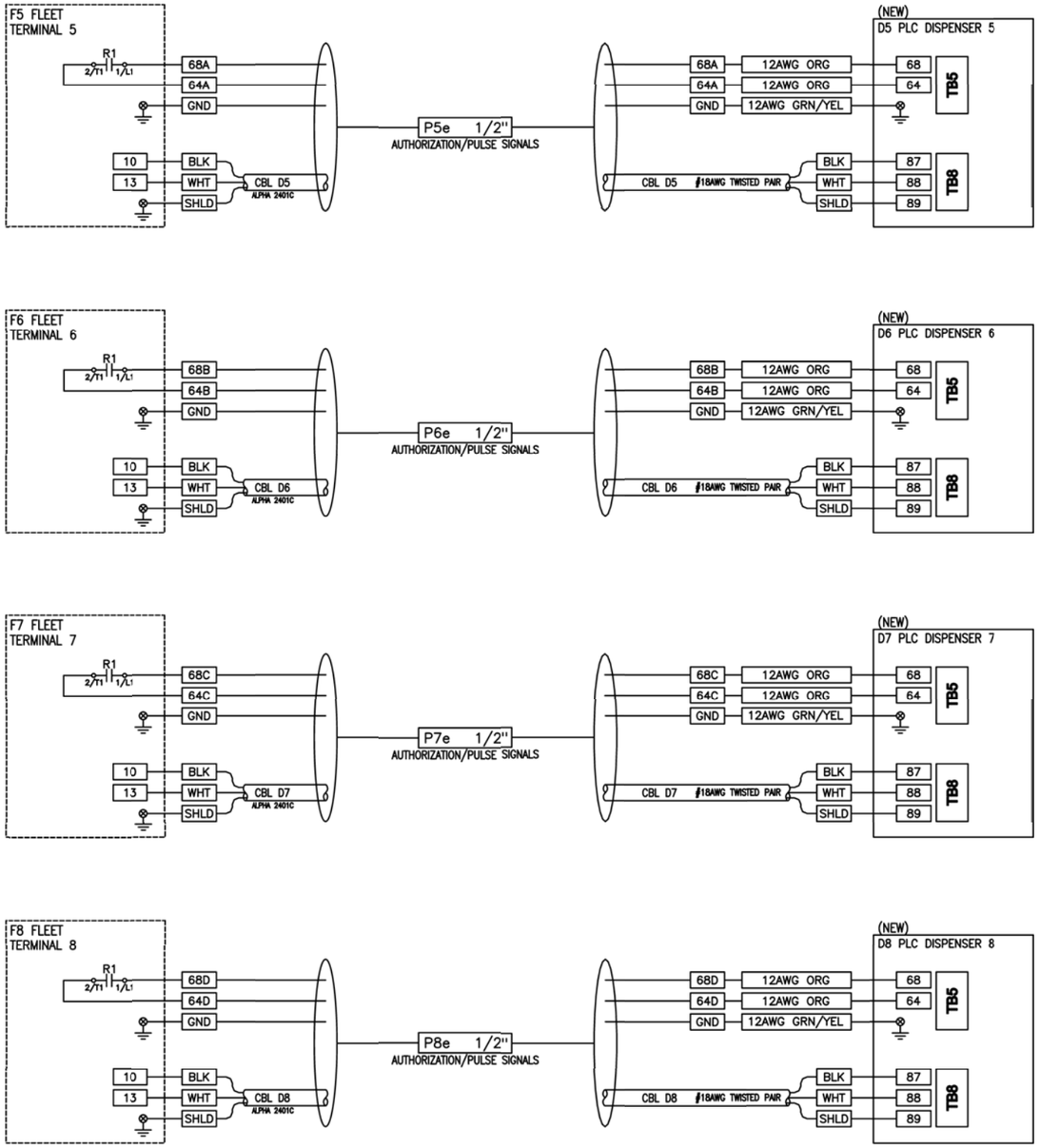


ALLOW FOR 10% SPARE CONDUCTORS IN ALL CONDUITS

| REV | DATE/BY | DESCRIPTION | REV | DATE/BY | DESCRIPTION |
|---|---|---|---|---|---|
| D | 1/20/17 MWS | ECN# CN04473 UPDATED DISPENSER FEEDS | H | 1/30/117 MWS | REVISED TITLEBLOCK SHEET NUMBERS |
| C | 1/11/17 MWS | (CR) MAIN MOTOR CONDUCTOR SIZE (CR) PRE-LUBE MOTOR CONDUCTOR SIZE | G | 1/30/17 MWS | CN# CN04508 CHANGES PER CUSTOMER REVIEW |
| K | 4/5/17 MWS | REVISED AS PER CUSTOMER REDLINES | F | 1/27/17 MWS | ECN# CN04503 CHANGES PER CUSTOMER REVIEW |
| J | 3/29/17 MWS | REVISED AS PER CUSTOMER REDLINES | E | 1/26/17 MWS | ECN# CN04499 CHANGES PER CUSTOMER REVIEW |

ALL ELECTRICAL CONNECTIONS MUST BE COMPLETED OR SUPERVISED BY QUALIFIED PERSONNEL, AND MEET ALL LOCAL AND APPLICABLE CODES. REFER TO NEC FOR MORE INFORMATION.



ANGI ENERGY SYSTEMS
305 W DELAVAN DR
JANESVILLE, WI 53546
PH: 608-563-2800
www.angienergy.com

CONTROLLED DRAWING

THIS DRAWING COMPLIES WITH AGENCY LISTINGS. DO NOT CHANGE WITHOUT APPROVAL FROM ENGINEERING DEPARTMENT.

TITLE: CONDUIT/CUSTOMER INTERCONNECT DETAILS
NEW PLC DISPENSERS TO FLEET TRANSIT INTERCONNECT

CUSTOMER: Trillium – RTC Las Vegas – SMF

PROJECT NO.: 50452

DRN: MWS | DATE: 11/8/16 | SCALE: 1:1 | DRAWING NO.: A80-50-50452 | REV.: K

CHK: – | DATE: – | SHT: 7 | TOT: 10

AUTOCAD WINDCHIL

# NEW VALVE PANEL INTERCONNECT

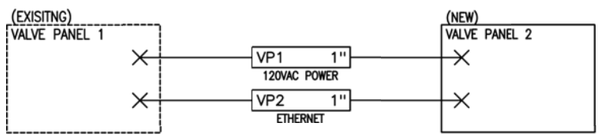


NOTES:

- EXISTING 120VAC POWER AND ESD LOOP FOR EXISTING VALVE PANEL 1 TO BE REUSED.
- NEW VALVE PANEL 2 TO USE 120VAC POWER (WIRED IN PARALLEL) OF EXISTING VALVE PANEL 1.
- NEW VALVE PANEL 2 TO USE EXISTING ESD POWER LOCATED AT EXISTING VALVE PANEL 1.
- NEW VALVE PANEL 2 TO HAVE ETHERNET SUPPLIED FROM CP-400.
  EXISTING VALVE PANEL 1 TO USED AS A PULL BOX FOR NEW VALVE PANEL 2 ETHERNET.

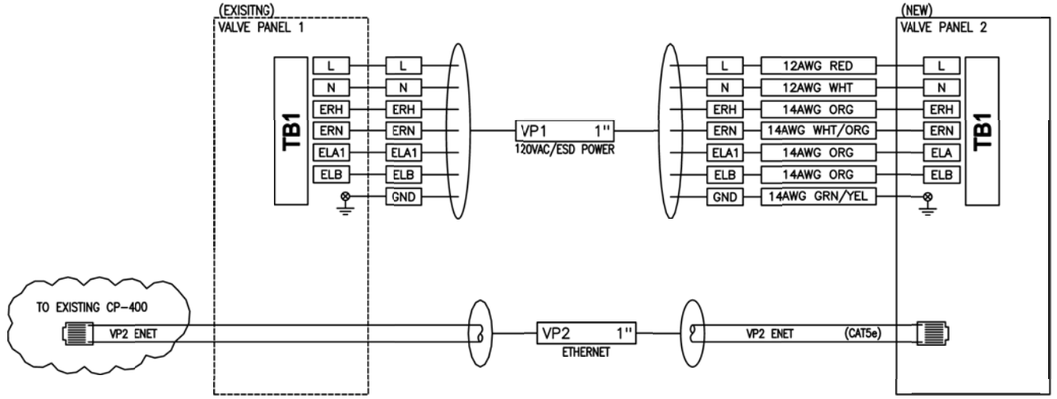


ALLOW FOR 10% SPARE CONDUCTORS IN ALL CONDUITS

| REV | DATE/BY | DESCRIPTION | REV | DATE/BY | DESCRIPTION |
|---|---|---|---|---|---|
| D | 1/20/17 MWS | ECN# CN04473 UPDATED DISPENSER FEEDS | H | 1/30/117 MWS | REVISED TITLEBLOCK SHEET NUMBERS |
| C | 1/11/17 MWS | (CR) MAIN MOTOR CONDUCTOR SIZE (CR) PRE-LUBE MOTOR CONDUCTOR SIZE | G | 1/30/17 MWS | CN# CN04508 CHANGES PER CUSTOMER REVIEW |
| K | 4/5/17 MWS | REVISED AS PER CUSTOMER REDLINES | F | 1/27/17 MWS | ECN# CN04503 CHANGES PER CUSTOMER REVIEW |
| J | 3/29/17 MWS | REVISED AS PER CUSTOMER REDLINES | E | 1/26/17 MWS | ECN# CN04499 CHANGES PER CUSTOMER REVIEW |

ALL ELECTRICAL CONNECTIONS MUST BE COMPLETED OR SUPERVISED BY QUALIFIED PERSONNEL, AND MEET ALL LOCAL AND APPLICABLE CODES. REFER TO NEC FOR MORE INFORMATION.



ANGI ENERGY SYSTEMS
305 W DELAVAN DR
JANESVILLE, WI 53546
PH: 608-563-2800
www.angienergy.com

CONTROLLED DRAWING
THIS DRAWING COMPLIES WITH AGENCY LISTINGS. DO NOT CHANGE WITHOUT APPROVAL FROM ENGINEERING DEPARTMENT.

| | | | | |
|---|---|---|---|---|
| TITLE | CONDUIT/CUSTOMER INTERCONNECT DETAILS NEW VALVE PANEL INTERCONNECT | | | |
| CUSTOMER | Trillium – RTC Las Vegas – SMF | PROJECT NO. | 50452 | |
| DRN MWS | DATE 11/8/16 | SCALE 1:1 | DRAWING NO. A80-50-50452 | REV. K |
| CHK – | DATE – | SHT 8 TOT 10 | | |

AUTOCAD WINDCHIL

# NEW ETHERNET INTERCONNECTION (MSP'S/MASTER CONTROL PANEL)

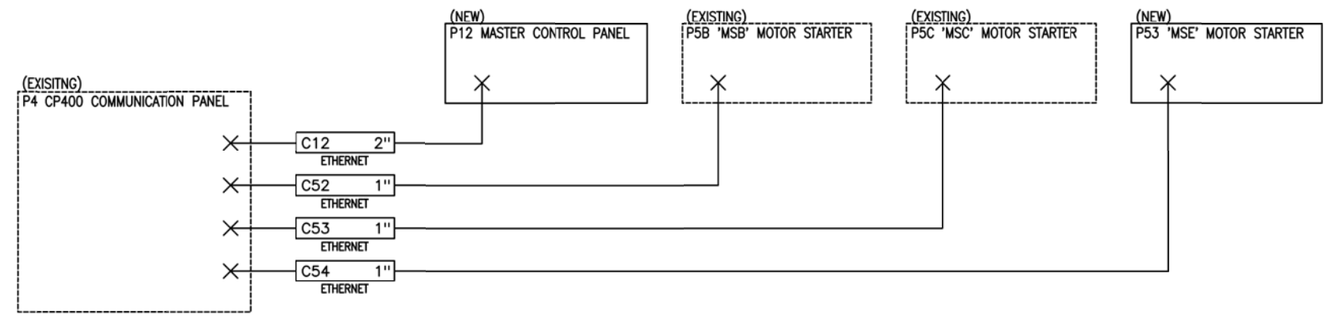


NOTES:

- ALL NEW ETHERNET CABLES RUN TO THE EXISTING CP-400 (P4) TO BE EXTENEDED TO THE MANAGED ETHERNET SWITCH LOCATED AT THE NEW MASTER CONTROL PANEL (P12).
- ALL EXISTING ETHERNET CABLES LOCATED AT THE EXISTING CP-400 TO BE EXTENED TO THE MANAGED ETHERNET SWITCH LOCATED AT THE NEW MASTER CONTROL PANEL (P12).
- NEW ETHERNET CONNECTION BETWEEN EXISTING CP-400 (P4) AND NEW MASTER CONTROL PANEL (P12) TO BE INSTALLED

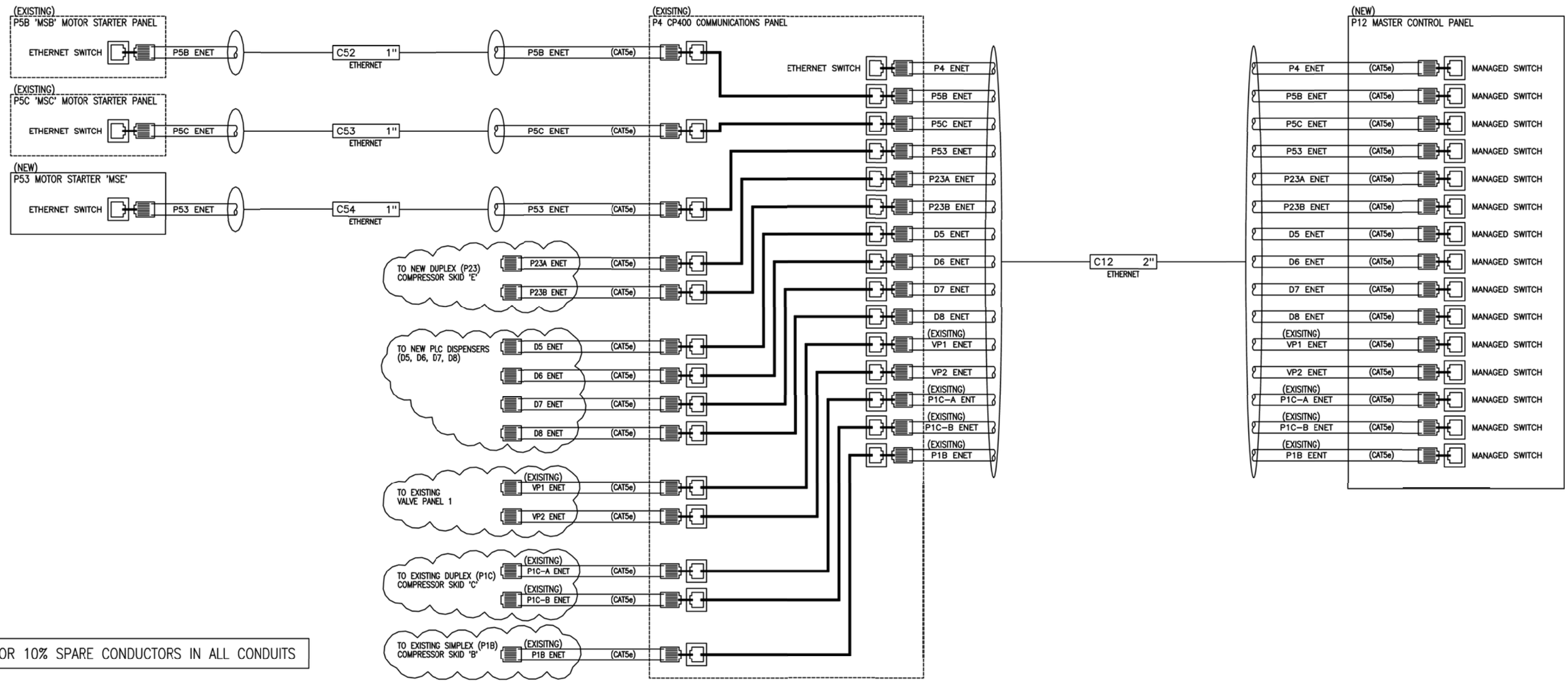


ALLOW FOR 10% SPARE CONDUCTORS IN ALL CONDUITS

| REV | DATE/BY | DESCRIPTION | REV | DATE/BY | DESCRIPTION |
|---|---|---|---|---|---|
| D | 1/20/17 MWS | ECN# CN04473 UPDATED DISPENSER FEEDS | H | 1/30/117 MWS | REVISED TITLEBLOCK SHEET NUMBERS |
| C | 1/11/17 MWS | (CR) MAIN MOTOR CONDUCTOR SIZE (CR) PRE-LUBE MOTOR CONDUCTOR SIZE | G | 1/30/17 MWS | CN# CN04508 CHANGES PER CUSTOMER REVIEW |
| K | 4/5/17 MWS | REVISED AS PER CUSTOMER REDLINES | F | 1/27/17 MWS | ECN# CN04503 CHANGES PER CUSTOMER REVIEW |
| J | 3/29/17 MWS | REVISED AS PER CUSTOMER REDLINES | E | 1/26/17 MWS | ECN# CN04499 CHANGES PER CUSTOMER REVIEW |

ALL ELECTRICAL CONNECTIONS MUST BE COMPLETED OR SUPERVISED BY QUALIFIED PERSONNEL, AND MEET ALL LOCAL AND APPLICABLE CODES. REFER TO NEC FOR MORE INFORMATION.



ANGI ENERGY SYSTEMS
305 W DELAVAN DR
JANESVILLE, WI 53546
PH: 608-563-2800
www.angienergy.com

CONTROLLED DRAWING
THIS DRAWING COMPLIES WITH AGENCY LISTINGS. DO NOT CHANGE WITHOUT APPROVAL FROM ENGINEERING DEPARTMENT.

TITLE: CONDUIT/CUSTOMER INTERCONNECT DETAILS
SITE ETHERNET INTERCONNECT

CUSTOMER: Trillium – RTC Las Vegas – SMF
PROJECT NO.: 50452
DRN: MWS | DATE: 11/8/16 | SCALE: 1:1 | DRAWING NO.: A80-50-50452 | REV.: K
CHK: – | DATE: – | SHT: 9 | TOT: 10

AUTOCAD WINDCHIL

# NEW COMPRESSOR DUPLEX SKID 'E' (P23)

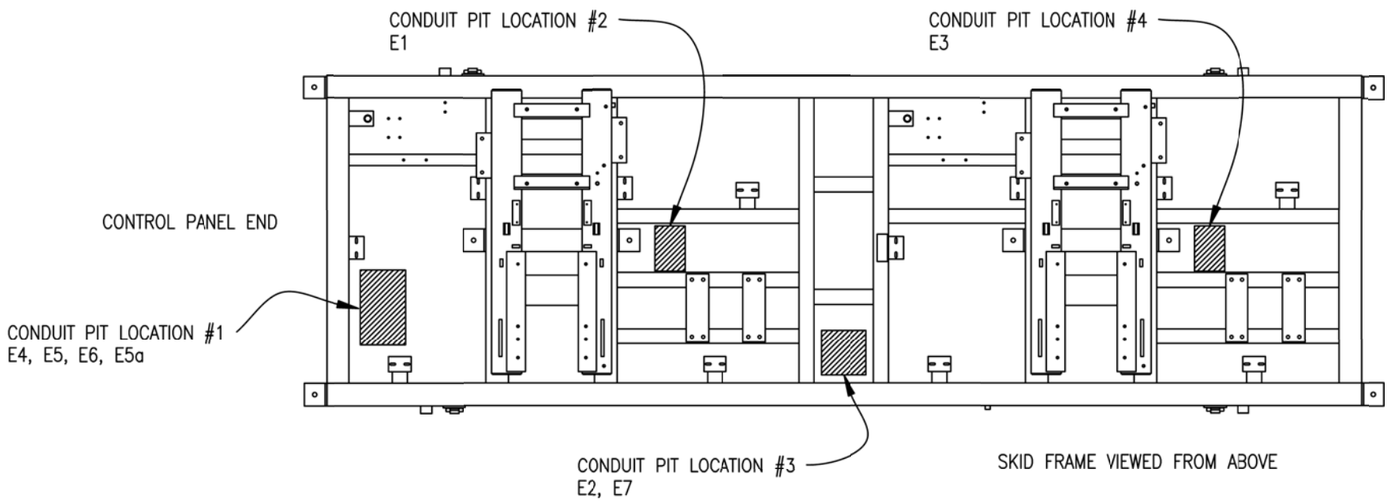


ALLOW FOR 10% SPARE CONDUCTORS IN ALL CONDUITS

| REV | DATE/BY | DESCRIPTION | REV | DATE/BY | DESCRIPTION |
|---|---|---|---|---|---|
| D | 1/20/17 MWS | ECN# CN04473 UPDATED DISPENSER FEEDS | H | 1/30/117 MWS | REVISED TITLEBLOCK SHEET NUMBERS |
| C | 1/11/17 MWS | (CR) MAIN MOTOR CONDUCTOR SIZE (CR) PRE-LUBE MOTOR CONDUCTOR SIZE | G | 1/30/17 MWS | CN# CN04508 CHANGES PER CUSTOMER REVIEW |
| K | 4/5/17 MWS | REVISED AS PER CUSTOMER REDLINES | F | 1/27/17 MWS | ECN# CN04503 CHANGES PER CUSTOMER REVIEW |
| J | 3/29/17 MWS | REVISED AS PER CUSTOMER REDLINES | E | 1/26/17 MWS | ECN# CN04499 CHANGES PER CUSTOMER REVIEW |

ALL ELECTRICAL CONNECTIONS MUST BE COMPLETED OR SUPERVISED BY QUALIFIED PERSONNEL, AND MEET ALL LOCAL AND APPLICABLE CODES. REFER TO NEC FOR MORE INFORMATION.



ANGI
ANGI ENERGY SYSTEMS
305 W DELAVAN DR
JANESVILLE, WI 53546
PH: 608-563-2800
www.angienergy.com

CONTROLLED DRAWING

THIS DRAWING COMPLIES WITH AGENCY LISTINGS. DO NOT CHANGE WITHOUT APPROVAL FROM ENGINEERING DEPARTMENT.

TITLE: CONDUIT/CUSTOMER INTERCONNECT DETAILS
NEW COMPRESSOR PIT LOCATIONS/CONDUIT CALL OUT

| | | | |
|---|---|---|---|
| CUSTOMER | Trillium – RTC Las Vegas – SMF | PROJECT NO. | 50452 |
| DRN MWS | DATE 11/8/16 | SCALE 1:1 | DRAWING NO. A80-50-50452 |
| CHK – | DATE – | SHT 10 TOT 10 | REV. K |

AUTOCAD WINDCHIL

NOTES:

1. DIMENSIONS AND TOLERANCES IN ACCORDANCE WITH ASME Y14.5M-2009.

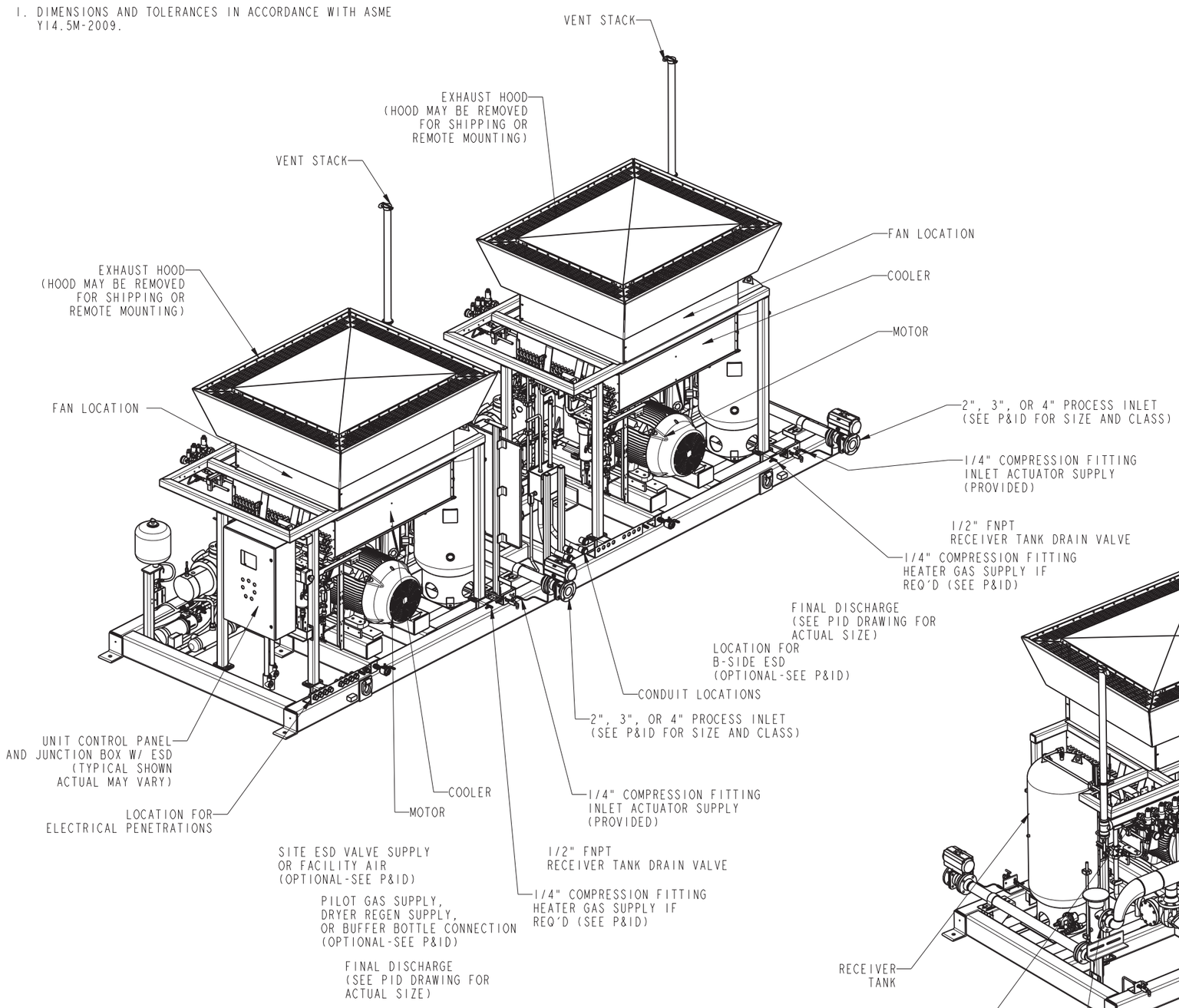


## COMPRESSOR DATA

WEIGHT: 30,000 LBS (APPROXIMATE).

TYPE: ARIEL RECIPROCATING COMPRESSOR.

CLEARANCE: ALLOW 36" MINIMUM ON ALL SIDES FOR ACCESS UNLESS OTHERWISE INDICATED.

MOUNTING: REQUIRES EIGHT (8) 1" DIAMETER ANCHOR BOLTS (NOT PROVIDED). GROUTING THE COMPRESSOR TO THE CONCRETE PAD IS NOT RECOMMENDED.

LIFTING: FOR SPREADER BAR SIZING, SEE A05-13-NG300E-DUPLEX

SHIPPING: VENT STACK, INLET VALVE, DRAIN VALVES,AND 1/4" ACTUATOR TUBING ARE REMOVED FOR SHIPPING.

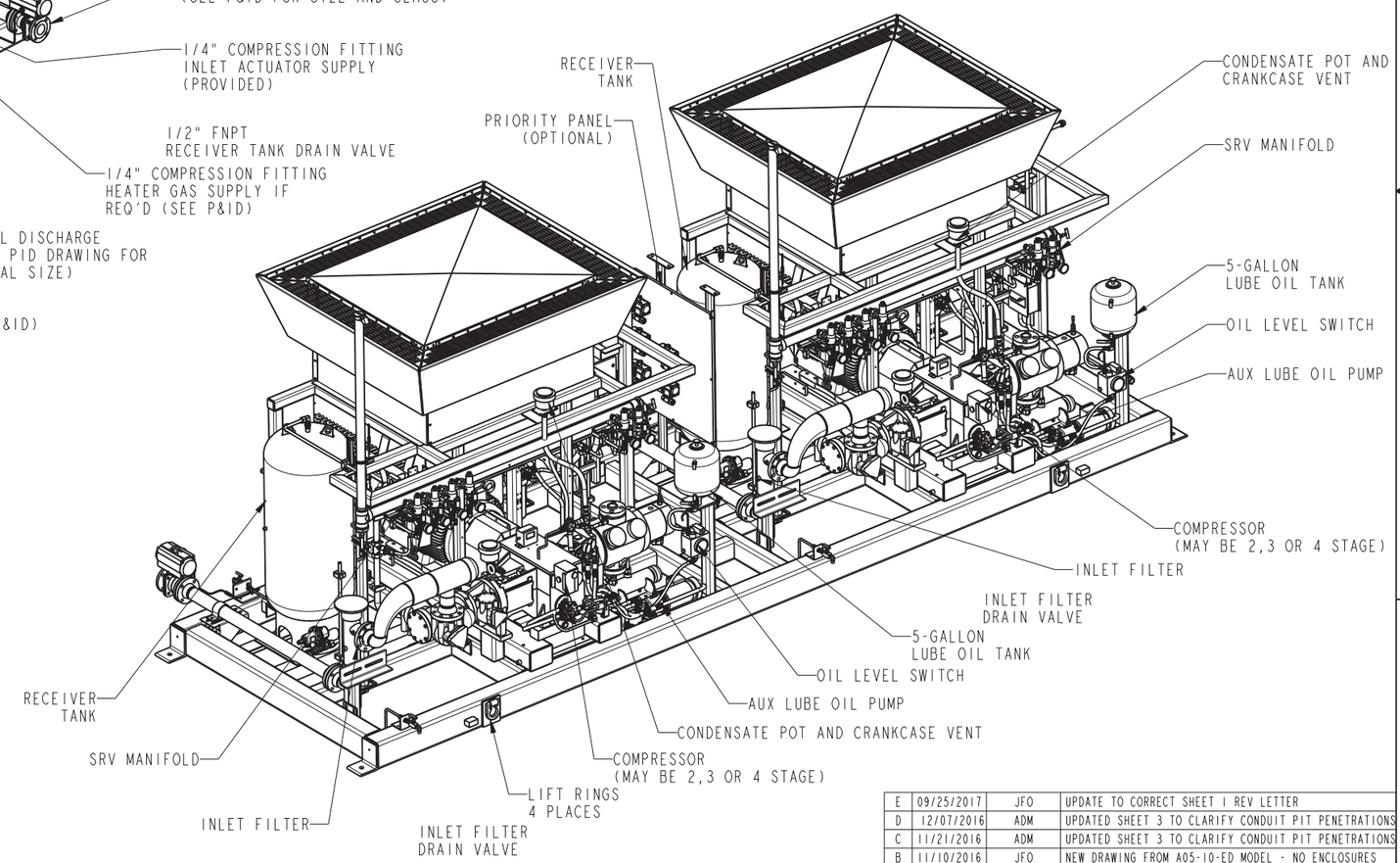


| REV | DATE | APPROVED | DESCRIPTION |
|---|---|---|---|
| E | 09/25/2017 | JFO | UPDATE TO CORRECT SHEET 1 REV LETTER |
| D | 12/07/2016 | ADM | UPDATED SHEET 3 TO CLARIFY CONDUIT PIT PENETRATIONS |
| C | 11/21/2016 | ADM | UPDATED SHEET 3 TO CLARIFY CONDUIT PIT PENETRATIONS |
| B | 11/10/2016 | JFO | NEW DRAWING FROM A05-10-ED MODEL - NO ENCLOSURES |

ANGI

ANGI ENERGY SYSTEMS
305 W DELAVAN DR
JANESVILLE, WI 53546
PH: 608-563-2800
www.angienergy.com



UNLESS OTHERWISE SPECIFIED
BREAK SHARP EDGES .005 -.015
ALL DIMENSIONS IN INCHES
FRACTIONAL ± 1/8
TWO PLACE DECIMAL ±.010
THREE PLACE DECIMAL ±.005
ANGLES ± 1°

TITLE: GENERAL LAYOUT-NG300E DUPLEX-NO ENCLOSURE
CUSTOMER:
PROJECT NO:
SHEET: 1 of 3
SCALE: 0.050
DRAWING NO: A05-10-ED-PIT-NO_ENC
REV: E
DRAWN BY: JFO
DATE: 10/13/2015

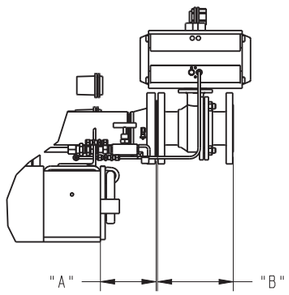


DETAIL I
SCALE 0.125

| INLET VALVE CHARTED DIMENSIONS | | | |
|---|---|---|---|
| SIZE INLET ∅ | CLASS | DIM "A" ± 1/2" | DIM "B" |
| 2 | 150 | 5.00 | 7.00 |
| 2 | 300 | 5.00 | 8.50 |
| 2 | 600 | 5.00 | 8.50 |
| 3 | 150 | 5.00 | 8.00 |
| 3 | 300 | 5.00 | 11.12 |
| 3 | 600 | 5.00 | 11.12 |
| 4 | 150 | 5.00 | 9.00 |

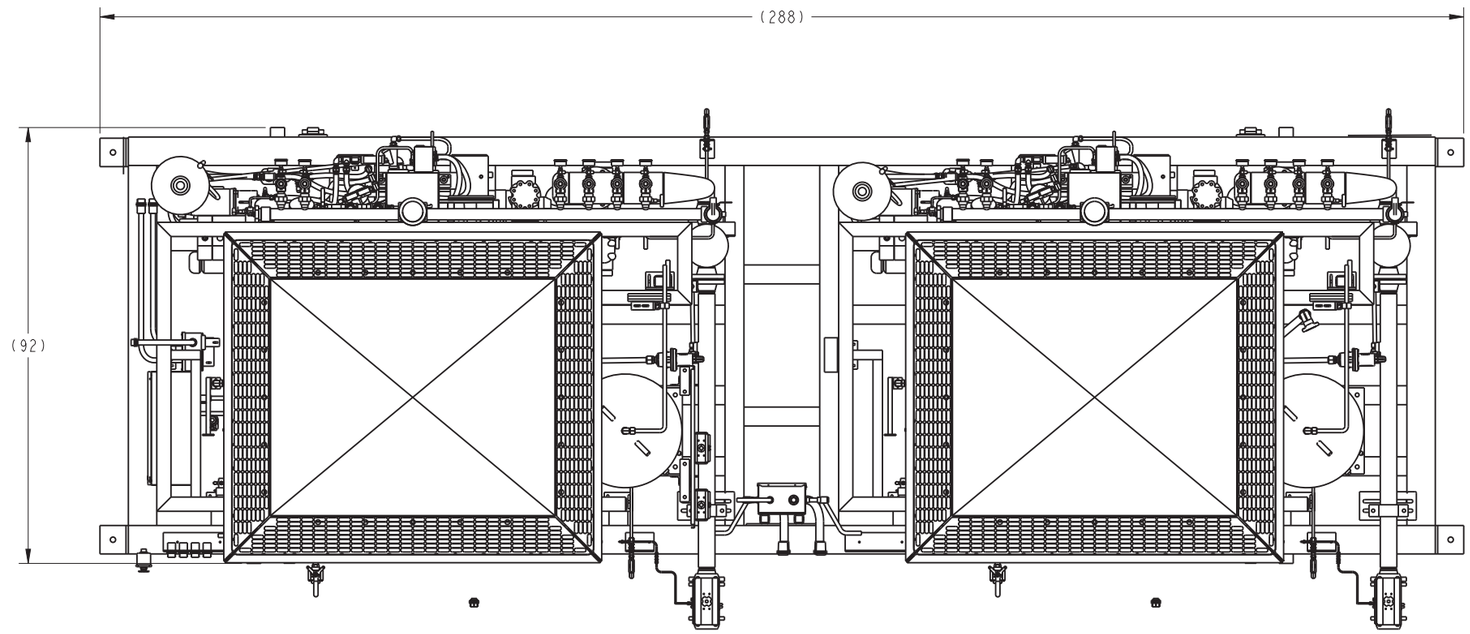


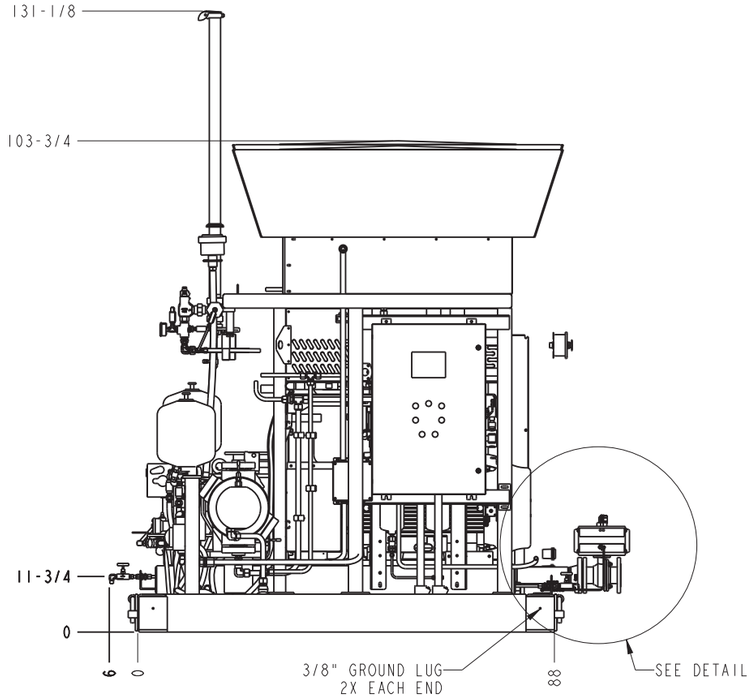


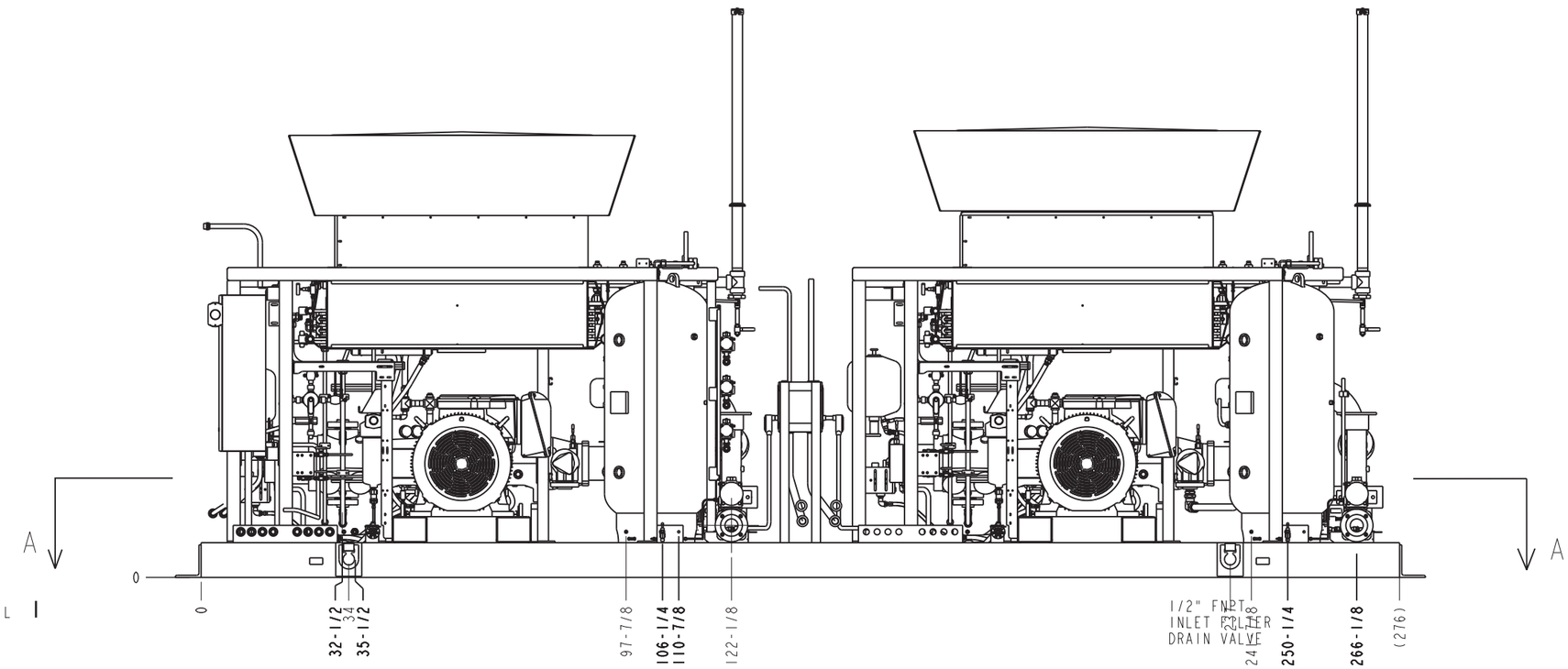


1/2" FNPT
INLET FILTER DRAIN VALVE

ANGI

ANGI ENERGY SYSTEMS
305 W DELAVAN DR
JANESVILLE, WI 53546
PH: 608-563-2800
www.angienergy.com



UNLESS OTHERWISE SPECIFIED
BREAK SHARP EDGES .005 -.015
ALL DIMENSIONS IN INCHES

| | |
|---|---|
| FRACTIONAL | ± 1/8 |
| TWO PLACE DECIMAL | ±.010 |
| THREE PLACE DECIMAL | ±.005 |
| ANGLES | ± 1° |

| | | | |
|---|---|---|---|
| TITLE | GENERAL LAYOUT-NG300E DUPLEX-NO ENCLOSURE | | |
| CUSTOMER | | PROJECT NO | |
| SHEET 2 of 3 | SCALE 0.063 | DRAWING NO A05-10-ED-PIT-NO_ENC | REV E |
| DRAWN BY JFO | DATE 10/13/2015 | | |

NOTE:
1.THE ANCHOR BOLT IS ∅1.0
2.LOCATION TOLERANCE IS ±1/8

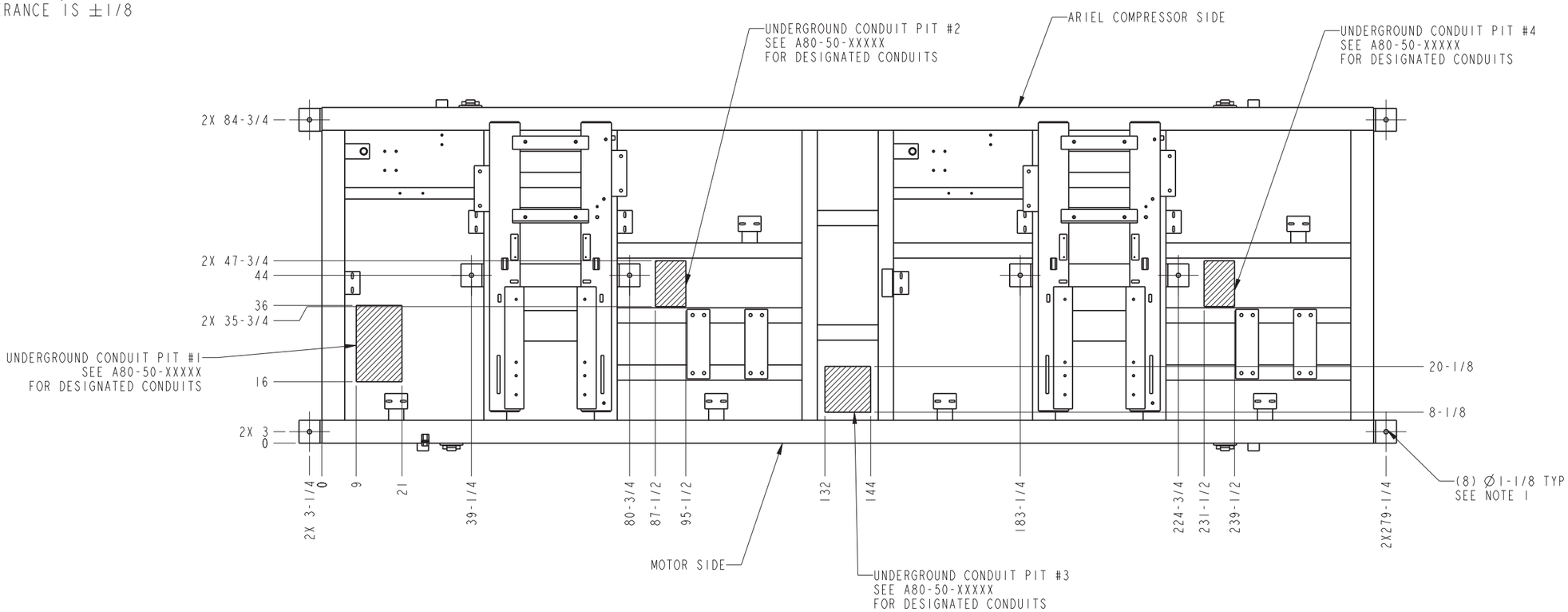


SECTION A-A
ANCHOR BOLT LOCATIONS
AND CONDUIT PIT PENETRAION LOCATIONS

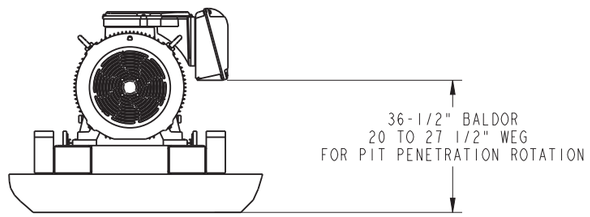


MOTOR CONDUIT HEIGHT

ANGI

ANGI ENERGY SYSTEMS
305 W DELAVAN DR
JANESVILLE, WI 53546
PH: 608-563-2800
www.angienergy.com



UNLESS OTHERWISE SPECIFIED
BREAK SHARP EDGES .005 -.015
ALL DIMENSIONS IN INCHES

| | |
|---|---|
| FRACTIONAL | ± 1/8 |
| TWO PLACE DECIMAL | ±.010 |
| THREE PLACE DECIMAL | ±.005 |
| ANGLES | ± 1° |

| | | | |
|---|---|---|---|
| TITLE: GENERAL LAYOUT-NG300E DUPLEX-NO ENCLOSURE | | | |
| CUSTOMER | | PROJECT NO | |
| SHEET: 3 of 3 | SCALE: 0.063 | DRAWING NO: A05-10-ED-PIT-NO_ENC | REV: E |
| DRAWN BY: JFO | DATE: 10/13/2015 | | |

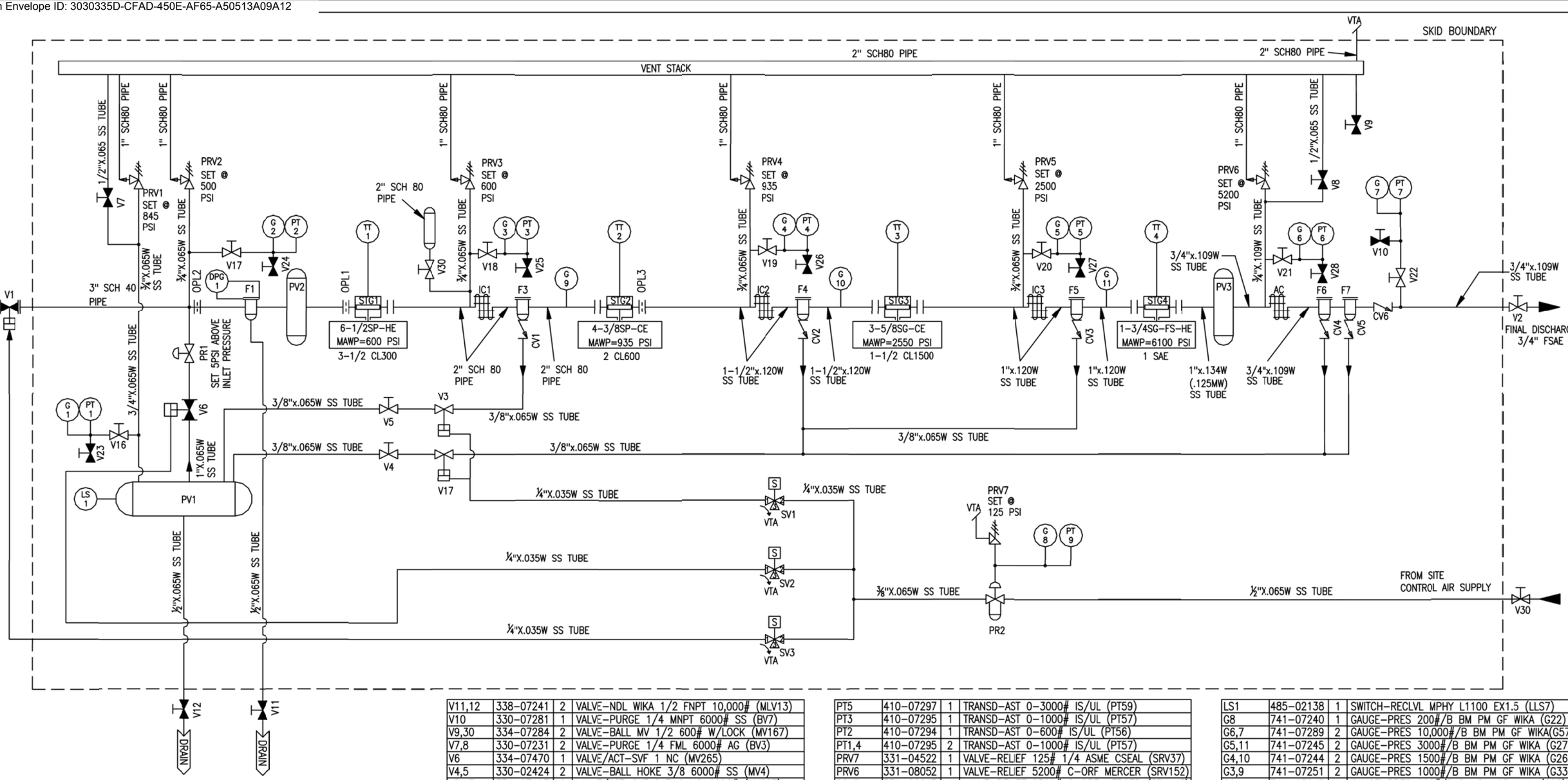


| DESIGNATOR | PART NUMBER | TOTAL QTY | DESCRIPTION |
|---|---|---|---|
| DPG1 | 741-07367 | 1 | GAUGE-PRES DIFF 2-20# WIKA (DPG7) |
| V30 | 338-07246 | 1 | VALVE-NEEDLE 1/2 FNPT 6000# (MLV20) |
| V24-29 | 330-07281 | 6 | VALVE-PURGE 1/4 MNPT 6000# SS (BV7) |
| V16-22 | 338-07251 | 7 | VALVE-NEEDLE 1/4 FNPT 6000# CS (MLV25) |

| DESIGNATOR | PART NUMBER | TOTAL QTY | DESCRIPTION |
|---|---|---|---|
| V11,12 | 338-07241 | 2 | VALVE-NDL WIKA 1/2 FNPT 10,000# (MLV13) |
| V10 | 330-07281 | 1 | VALVE-PURGE 1/4 MNPT 6000# SS (BV7) |
| V9,30 | 334-07284 | 2 | VALVE-BALL MV 1/2 600# W/LOCK (MV167) |
| V7,8 | 330-07231 | 2 | VALVE-PURGE 1/4 FML 6000# AG (BV3) |
| V6 | 334-07470 | 1 | VALVE/ACT-SVF 1 NC (MV265) |
| V4,5 | 330-02424 | 2 | VALVE-BALL HOKE 3/8 6000# SS (MV4) |
| V3,17 | 334-07497 | 2 | VALVE/ACT-SVF SAE-8 NO 6000# (MV287) |
| V2 | 334-07559 | 1 | VALVE-BALL SVF SAE-12 6000# (MV349) |
| V1 | 334-07404 | 1 | VALVE/ACT-SVF 3CL300 CS (MV199) |
| TT1-4 | 700-08041 | 4 | RTD ASSY-400F MAX 5700# W/TWELL (RTD14) |
| SV1-3 | 330-07243 | 3 | VALVE-SOL 3WY 1/4 150# 120V NC (SV9) |
| PV3 | B02-88-018 | 1 | PULSATION BOTTLE, 90CU-IN, 6100# MAWP |
| PV2 | B02-15-013 | 1 | PULSATION BOTTLE, 3-1/2X3 CL300 800CU-IN |
| PV1 | 944-07267 | 1 | TANK-VERT 97GAL 845# (PV85) |
| PT9 | 410-07293 | 1 | TRANSD-AST 0-300# IS/UL (PT55) |
| PT6,7 | 410-07298 | 2 | TRANSD-AST 0-6000# IS/UL (PT60) |

| DESIGNATOR | PART NUMBER | TOTAL QTY | DESCRIPTION |
|---|---|---|---|
| PT5 | 410-07297 | 1 | TRANSD-AST 0-3000# IS/UL (PT59) |
| PT3 | 410-07295 | 1 | TRANSD-AST 0-1000# IS/UL (PT57) |
| PT2 | 410-07294 | 1 | TRANSD-AST 0-600# IS/UL (PT56) |
| PT1,4 | 410-07295 | 2 | TRANSD-AST 0-1000# IS/UL (PT57) |
| PRV7 | 331-04522 | 1 | VALVE-RELIEF 125# 1/4 ASME CSEAL (SRV37) |
| PRV6 | 331-08052 | 1 | VALVE-RELIEF 5200# C-ORF MERCER (SRV152) |
| PRV5 | 331-08043 | 1 | VALVE-RELIEF 2500# C-ORF MERCER (SRV143) |
| PRV4 | 331-08077 | 1 | VALVE-RELIEF 935# D-ORF MERCER (SRV223) |
| PRV3 | 331-08022 | 1 | VALVE-RELIEF 600# D-ORF MERCER (SRV122) |
| PRV2 | 331-08018 | 1 | VALVE-RELIEF 500# D-ORF MERCER (SRV118) |
| PRV1 | 331-08211 | 1 | VALVE-RELIEF 845# D-ORF MERCER (SRV129) |
| PR2 | 770-07251 | 1 | FILTER-FINITE W/REG 3/4 FNPT (F28) |
| PR1 | 991-07317 | 1 | REG-1" 150-200#SPRG 3/8ORF 630 (PR122) |
| OPL3 | R1012 | 1 | ORIFICE-PLATE 2" CL300 (0.53" HOLE) |
| OPL2 | R1055 | 1 | ORIFICE-PLATE 3" CL300 (1.375" HOLE) |
| OPL1 | R1014 | 1 | ORIFICE-PLATE 3-1/2" CL300 (2.14" HOLE) |

| DESIGNATOR | PART NUMBER | TOTAL QTY | DESCRIPTION |
|---|---|---|---|
| LS1 | 485-02138 | 1 | SWITCH-RECLVL MPHY L1100 EX1.5 (LLS7) |
| G8 | 741-07240 | 1 | GAUGE-PRES 200#/B BM PM GF WIKA (G22) |
| G6,7 | 741-07289 | 2 | GAUGE-PRES 10,000#/B BM PM GF WIKA(G57) |
| G5,11 | 741-07245 | 2 | GAUGE-PRES 3000#/B BM PM GF WIKA (G27) |
| G4,10 | 741-07244 | 2 | GAUGE-PRES 1500#/B BM PM GF WIKA (G26) |
| G3,9 | 741-07251 | 2 | GAUGE-PRES 1000#/B BM PM GF WIKA (G33) |
| G2 | 741-07243 | 1 | GAUGE-PRES 600#/B BM PM GF WIKA (G25) |
| G1 | 741-07251 | 1 | GAUGE-PRES 1000#/B BM PM GF WIKA (G33) |
| F7 | 772-07308 | 1 | FILTER-ANGI SAE-24 GR4 COALESCING (F178) |
| F6 | 772-07307 | 1 | FILTER-ANGI SAE-24 GR10 COALESCING (F177) |
| F5 | 772-07300 | 1 | FILTER-ANGI SAE-12 SS 100 MICRON (F170) |
| F4 | 772-07303 | 1 | FILTER-ANGI SAE-16 SS 100 MICRON (F173) |
| F3 | 772-07274 | 1 | FILTER-FINITE MS8S COALESCING (F101) |
| F1 | 772-07353 | 1 | FILTER-FINITE 3 HN12L 7CVP 500# (F212) |
| CV6 | 336-07254 | 1 | VALVE-CHECK 3/4 FML 6000# (CV44) |
| CV1-5 | 336-07266 | 5 | VALVE-CHECK 3/8 FML 6000# (CV55) |

| REV | DATE/BY | DESCRIPTION | REV | DATE/BY | DESCRIPTION |
|---|---|---|---|---|---|
| D | 3/31/17 ADM | ADDED ORIFICE PLATES 2 & 3 AND BOTTLE | | | |
| C | 2/10/17 ADM | PR1 IS 630 NOT 627, FIXED F1 PART NUMBER | | | |
| B | 2/8/17 ADM | ADDED V30, CORRECTED PV2, PT2, PT3, PRV1, G3 & G9 IN TABLE | | | |
| A | 11/21/16 ADM | ADDED DPG TO F1, CHG'D F1 | | | |

ANGI

ANGI ENERGY SYSTEMS
305 W DELAVAN DR
JANESVILLE, WI 53546
PH: 608-563-2800
www.angienergy.com



UNLESS OTHERWISE SPECIFIED
BREAK SHARP EDGES .005-.015
ALL DIMENSIONS IN INCHES

| | |
|---|---|
| FRACTIONAL | ± 1/8 |
| TWO PLACE DECIMAL | ±.010 |
| THREE PLACE DECIMAL | ±.005 |
| ANGLES | ±1° |

TITLE: 2 THROW, 4 STAGE COMPRESSOR PIPING AND INSTRUMENTATION PIPING SYSTEM -- DUPLEX COMPRESSOR 1 & 2

| | | | | | |
|---|---|---|---|---|---|
| CUSTOMER | TRILLIUM – RTC LAS VEGAS SMF | PROJECT NO. | 50452 | | |
| DRN ADM | DATE 11/14/16 | SCALE | NA | DRAWING NO. | REV. |
| CHK ADM | DATE 11/14/16 | SHT 1 | TOT 2 | A05-20-50452 | D |

AUTOCAD WINDCHIL

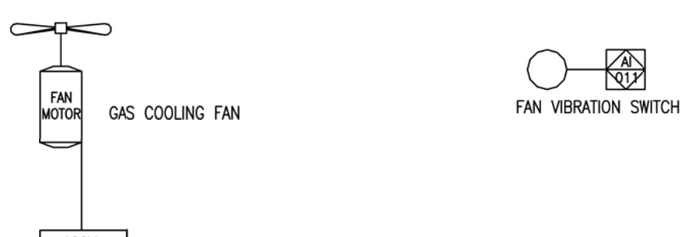


| LEGEND | | | |
|---|---|---|---|
| C | = OIL COOLER | PX | = PROXIMITY SWITCH |
| CV | = CHECK VALVE | PT | = PRESSURE TRANSDUCER |
| F | = FILTER | PV | = PRESSURE VESSEL |
| G | = PRESSURE GAUGE | SV | = SOLENOID VALVE |
| LS | = LEVEL SWITCH | T | = THERMOMETER |
| N.C. | = NORMALLY CLOSED | TS | = TEMPERATURE SWITCH |
| N.O. | = NORMALLY OPEN | TT | = TEMPERATURE TRANSMITTER |
| OPL | = ORIFICE PLATE | TV | = THERMOSTATIC VALVE |
| P | = OIL PUMP | V | = MANUAL/ACTUATED VALVE |
| PR | = PRESSURE REGULATOR | VS | = VIBRATION SWITCH |
| PRV | = PRESSURE RELIEF VALVE | VTA | = VENT TO ATMOSPHERE |

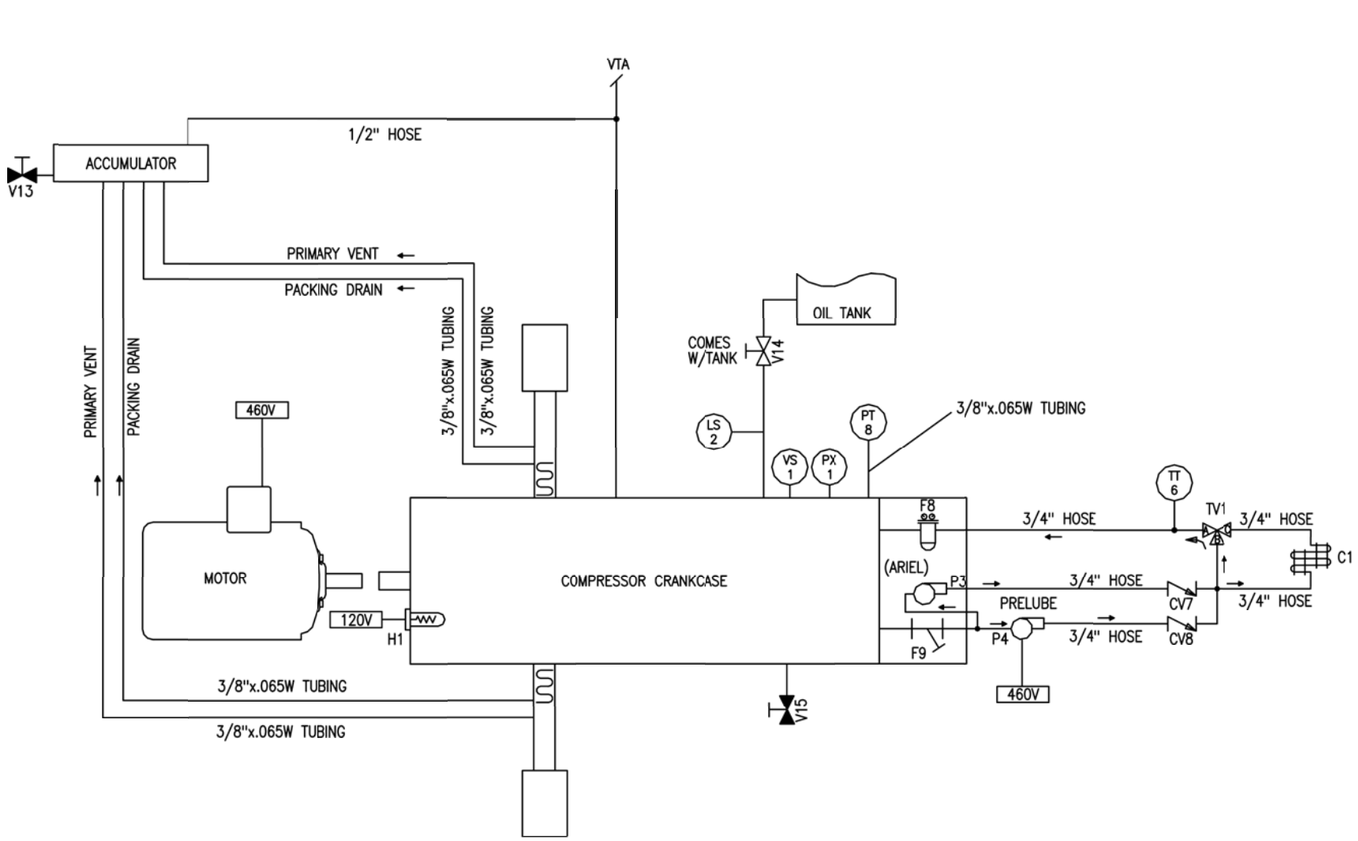


| DESIGNATOR | PART NUMBER | TOTAL QTY | DESCRIPTION |
|---|---|---|---|
| – | 940–07237 | 1 | TANK–OIL RESERVOIR 5 GAL 1/2FNPT |
| V15 | 334–07264 | 1 | VALVE–BALL 1 600# W/LKG HDL BRONZE (MV74) |
| V14 | | 1 | VALVE–BALL 1/2 BRONZE |
| V13 | 334–07284 | 1 | VALVE–BALL 1/2 600# BRONZE LKG HDL (MV167) |
| VS1 | 480–07246 | 1 | SWITCH–VIBRATION MURPHY NON–EX (VS2) |
| TV1 | 330–07411 | 1 | VALVE–THERMOSTATIC 3–WAY 1/2 160F (TV11) |
| TT6 | 700–08322 | 1 | RTD – 0.5 x 1/2 MNPT W/THERMOWELL (RTD26) |
| PT8 | 410–07292 | 1 | TRANSDUCER–PRESS AST 0–100# IS/UL (PT54) |
| PX1 | | 1 | PROXIMITY SWITCH – WHITLOCK (ARIEL SUPPLIED) |
| P4 | | 1 | PUMP–PRELUBE 1/2 FNPT TUTHILL |
| P3 | | 1 | PUMP–OIL ARIEL SUPPLIED |
| C1 | 150–07375 | 1 | COOLER–OIL 4.3KW, 100CFM, 2.7GPM 3/4"MJIC |
| LS2 | 485–07239 | 1 | SWITCH–OIL MNT LIQUID LEVEL 9.5#MAX (LLS17) |
| H1 | 707–07241 | 1 | HEATER–OIL 1NPT 120V 150W (CH5) |
| F9 | | 1 | Y–STRAINER OIL (ARIEL SUPPLIED) |
| F8 | | 1 | FILTER–OIL (ARIEL SUPPLIED) |
| CV7,8 | 336–07231 | 2 | VALVE–CHECK 1/2 FML BRASS 200# (CV24) |

ANGI

ANGI ENERGY SYSTEMS
305 W DELAVAN DR
JANESVILLE, WI 53546
PH: 608–563–2800
www.angienergy.com



UNLESS OTHERWISE SPECIFIED
BREAK SHARP EDGES .005–.015
ALL DIMENSIONS IN INCHES

| | |
|---|---|
| FRACTIONAL | ± 1/8 |
| TWO PLACE DECIMAL | ±.010 |
| THREE PLACE DECIMAL | ±.005 |
| ANGLES | ±1° |

TITLE: 2 THROW, 4 STAGE COMPRESSOR PIPING AND INSTRUMENTATION LUBRICATION CIRCUIT -- DUPLEX COMPRESSOR 1 & 2

| | | | | | |
|---|---|---|---|---|---|
| CUSTOMER | TRILLIUM – RTC LAS VEGAS SMF | | | PROJECT NO. | 50452 |
| DRN ADM | DATE 11/14/16 | SCALE NA | | DRAWING NO. A05–20–50452 | REV. D |
| CHK ADM | DATE 11/14/16 | SHT 2 | TOT 2 | | |

AUTOCAD WINDCHIL

# Ariel Performance

| | | | | |
|---|---|---|---|---|
| 7.7.3.0 | Company: | Ariel Corporation | Customer: | ANGI ENERGY SYSTEMS |
| | Quote: | | Inquiry: | |
| | Case 3: | MIN (70 PSIG @ 80F) | Project: | IBMF RTC |

**Compressor Data:**

| | | | | | | | |
|---|---|---|---|---|---|---|---|
| Elevation,ft: | 2030.00 | Barmtr,psia: | 13.636 | Ambient,°F: | 115.00 | **Driver Data:** | |
| Frame: | JGQ/2 | Stroke, in: | 3.00 | Rod Dia, in: | 1.125 | Type: | Electric |
| Max RL Tot, lbf: | 20000 | Max RL Tens, lbf: | 10000 | Max RL Comp, lbf: | 11000 | Mfg: | |
| Rated RPM: | 1800 | Rated BHP: | 280.0 | Rated PS FPM: | 900.0 | Model: | Electric Mot |
| Calc RPM: | 1785.0 | BHP: | 163 | Calc PS FPM: | 892.5 | BHP: | 300 |
| | | | | | | Avail: | 300 |

| **Services** | **Service 1** | | | |
|---|---|---|---|---|
| Gas Model | VMG | | | |
| **Stage Data:** | **1 (SG)** | **2** | **3** | **4** |
| Target Flow, SCFM | 2000.000 | 2000.000 | 2000.000 | 2000.000 |
| Flow Calc, SCFM | 412.364 | 412.365 | 412.367 | 412.366 |
| BHP per Stage | 40.3 | 31.9 | 40.1 | 44.3 |
| Specific Gravity | 0.5900 | 0.5904 | 0.5904 | 0.5904 |
| Ratio of Sp Ht (N) | 1.2775 | 1.2742 | 1.2795 | 1.2820 |
| Comp Suct (Zs) | 0.9867 | 0.9753 | 0.9511 | 0.8842 |
| Comp Disch (Zd) | 0.9841 | 0.9741 | 0.9621 | 1.0241 |
| Pres Suct Line, psig | 70.00 | N/A | N/A | N/A |
| Pres Suct Flg, psig | 70.00 | 207.64 | 443.45 | 1311.70 |
| Pres Disch Flg, psig | 212.64 | 453.45 | 1328.35 | 4545.14 |
| Pres Disch Line, psig | N/A | N/A | N/A | 4500.00 |
| Pres Ratio F/F | 2.705 | 2.111 | 2.936 | 3.440 |
| Temp Suct, °F | 80.00 | 135.00 | 135.00 | 135.00 |
| Temp Clr Disch, °F | 135.00 | 135.00 | 135.00 | 135.00 |
| **Cylinder Data:** | **Throw 2** | **Throw 2** | **Throw 1** | **Throw 1** |
| Cyl Model | 6-1/2SP-HE | 4-3/8SP-CE | 3-5/8SG-CE | 1-3/4SG-FS-HE |
| Cyl Bore, in | 6.500 | 4.125 | 3.375 | 1.750 |
| Cyl RDP (API), psig | 545.5 | 850.0 | 2318.2 | 5545.5 |
| Cyl MAWP, psig | 600.0 | 935.0 | 2550.0 | 6100.0 |
| Cyl Action | HE | CE | CE | HE |
| Cyl Disp, CFM | 102.8 | 38.3 | 24.6 | 7.5 |
| Pres Suct Intl, psig | 59.64 | 189.31 | 426.61 | 1303.37 |
| Temp Suct Intl, °F | 86 | 139 | 140 | 140 |
| Pres Disch Intl, psig | 238.20 | 499.14 | 1385.43 | 4634.97 |
| Temp Disch Intl, °F | 253 | 271 | 312 | 331 |
| HE Suct Gas Vel, FPM | 11927 | N/A | N/A | 2665 |
| HE Disch Gas Vel, FPM | 10840 | N/A | N/A | 4863 |
| HE Spcrs Used/Max | 0/2 | N/A | N/A | N/A |
| HE Vol Pkt Avail, % | No Pkt | N/A | N/A | No Pkt |
| Vol Pkt Used, % | No Pkt | N/A % | N/A % | No Pkt |
| HE Min Clr, % | 18.57 | N/A | N/A | 24.32 |
| HE Total Clr, % | 18.57 | N/A | N/A | 24.32 |
| CE Suct Gas Vel, FPM | N/A | 10157 | 6694 | N/A |
| CE Disch Gas Vel, FPM | N/A | 10157 | 6841 | N/A |
| CE Spcrs Used/Max | N/A | 0/2 | N/A | N/A |
| CE Min Clr, % | N/A | 19.53 | 27.26 | N/A |
| CE Total Clr, % | N/A | 19.53 | 27.26 | N/A |
| Suct Vol Eff HE/CE, % | 72.2/N/A | N/A/79.8 | N/A/58.6 | 62.1/N/A |
| Disch Event HE/CE, ms | 6.2/N/A | N/A/8.3 | N/A/6.1 | 5.0/N/A |
| Suct Pseudo-Q HE/CE | 12.2/N/A | N/A/7.6 | N/A/4.4 | 0.9/N/A |
| Gas Rod Ld Comp, % | 38.0 C | 38.0 C | 96.9 C | 96.9 C |
| Gas Rod Ld Tens, % | 55.8 T | 55.8 T | 49.8 T | 49.8 T |
| Gas Rod Ld Total, % | 48.8 | 48.8 | 78.2 | 78.2 |
| Xhd Pin Deg/%Rvrsl lbf | 166/54.4 | 166/54.4 | 92/19.8 | 92/19.8 |
| Flow Calc, SCFM | 412.364 | 412.365 | 412.367 | 412.366 |
| Cyl BHP | 40.3 | 31.9 | 40.1 | 44.3 |

# Ariel Performance

| | | | | |
|---|---|---|---|---|
| 7.7.3.0 | Company: | Ariel Corporation | Customer: | ANGI ENERGY SYSTEMS |
| | Quote: | | Inquiry: | |
| | Case 1: | DESIGN (163 PSIG @ 80F) | Project: | IBMF RTC |

**Compressor Data:**

| | | | | | | | |
|---|---|---|---|---|---|---|---|
| Elevation,ft: | 2030.00 | Barmtr,psia: | 13.636 | Ambient,°F: | 115.00 | **Driver Data:** | |
| Frame: | JGQ/2 | Stroke, in: | 3.00 | Rod Dia, in: | 1.125 | Type: | Electric |
| Max RL Tot, lbf: | 20000 | Max RL Tens, lbf: | 10000 | Max RL Comp, lbf: | 11000 | Mfg: | |
| Rated RPM: | 1800 | Rated BHP: | 280.0 | Rated PS FPM: | 900.0 | Model: | Electric Mot |
| Calc RPM: | 1785.0 | BHP: | 279 | Calc PS FPM: | 892.5 | BHP: | 300 |
| | | | | | | Avail: | 300 |

*Discharge*

| **Services** | **Service 1** | | | |
|---|---|---|---|---|
| Gas Model | VMG | | | |
| **Stage Data:** | **1 (SG)** | **2** | **3** | **4** |
| Target Flow, SCFM | 2000.000 | 2000.000 | 2000.000 | 2000.000 |
| Flow Calc, SCFM | 902.950 | 902.950 | 902.957 | 902.951 |
| BHP per Stage | 84.0 | 59.3 | 74.5 | 55.6 |
| Specific Gravity | 0.5900 | 0.5903 | 0.5903 | 0.5903 |
| Ratio of Sp Ht (N) | 1.2787 | 1.2798 | 1.2844 | 1.2744 |
| Comp Suct (Zs) | 0.9707 | 0.9489 | 0.9121 | 0.8489 |
| Comp Disch (Zd) | 0.9663 | 0.9498 | 0.9458 | 0.9880 |
| Pres Suct Line, psig | 163.00 | N/A | N/A | N/A |
| Pres Suct Flg, psig | 163.00 | 437.11 | 823.32 | 2107.98 |
| Pres Disch Flg, psig | 445.06 | 833.32 | *2128.06* | 4545.14 |
| Pres Disch Line, psig | N/A | N/A | N/A | 4500.00 |
| Pres Ratio F/F | 2.597 | 1.879 | 2.559 | 2.149 |
| Temp Suct, °F | 80.00 | 135.00 | 135.00 | 135.00 |
| Temp Clr Disch, °F | 135.00 | 135.00 | 135.00 | 135.00 |
| **Cylinder Data:** | **Throw 2** | **Throw 2** | **Throw 1** | **Throw 1** |
| Cyl Model | 6-1/2SP-HE | 4-3/8SP-CE | 3-5/8SG-CE | 1-3/4SG-FS-HE |
| Cyl Bore, in | 6.500 | 4.125 | 3.375 | 1.750 |
| Cyl RDP (API), psig | 545.5 | 850.0 | 2318.2 | 5545.5 |
| Cyl MAWP, psig | 600.0 | 935.0 | 2550.0 | 6100.0 |
| Cyl Action | HE | CE | CE | HE |
| Cyl Disp, CFM | 102.8 | 38.3 | 24.6 | 7.5 |
| Pres Suct Intl, psig | 140.75 | 398.71 | 791.14 | 2094.06 |
| Temp Suct Intl, °F | 86 | 138 | 139 | 138 |
| Pres Disch Intl, psig | 498.21 | 920.11 | 2223.26 | 4649.02 |
| Temp Disch Intl, °F | 248 | 255 | 291 | 249 |
| HE Suct Gas Vel, FPM | 11927 | N/A | N/A | 2665 |
| HE Disch Gas Vel, FPM | 10840 | N/A | N/A | 4863 |
| HE Spcrs Used/Max | 0/2 | N/A | N/A | N/A |
| HE Vol Pkt Avail, % | No Pkt | N/A | N/A | No Pkt |
| Vol Pkt Used, % | No Pkt | N/A % | N/A % | No Pkt |
| HE Min Clr, % | 18.57 | N/A | N/A | 24.32 |
| HE Total Clr, % | 18.57 | N/A | N/A | 24.32 |
| CE Suct Gas Vel, FPM | N/A | 10157 | 6694 | N/A |
| CE Disch Gas Vel, FPM | N/A | 10157 | 6841 | N/A |
| CE Spcrs Used/Max | N/A | 0/2 | N/A | N/A |
| CE Min Clr, % | N/A | 19.53 | 27.26 | N/A |
| CE Total Clr, % | N/A | 19.53 | 27.26 | N/A |
| Suct Vol Eff HE/CE, % | 73.7/N/A | N/A/83.4 | N/A/67.2 | 81.5/N/A |
| Disch Event HE/CE, ms | 6.3/N/A | N/A/9.0 | N/A/6.9 | 7.4/N/A |
| Suct Pseudo-Q HE/CE | 12.4/N/A | N/A/7.8 | N/A/4.6 | 0.9/N/A |
| Gas Rod Ld Comp, % | 76.1 C | 76.1 C | 93.4 C | 93.4 C |
| Gas Rod Ld Tens, % | 99.4 T | 99.4 T | 72.6 T | 72.6 T |
| Gas Rod Ld Total, % | 91.6 | 91.6 | 87.7 | 87.7 |
| Xhd Pin Deg/%Rvrsl lbf | 127/73.7 | 127/73.7 | 171/45.0 | 171/45.0 |
| Flow Calc, SCFM | 902.950 | 902.950 | 902.957 | 902.951 |
| Cyl BHP | 84.0 | 59.3 | 74.5 | 55.6 |

# Ariel Performance

| | | | | |
|---|---|---|---|---|
| 7.7.3.0 | Company: | Ariel Corporation | Customer: | ANGI ENERGY SYSTEMS |
| | Quote: | | Inquiry: | |
| | Case 2: | MAX (164 PSIG @ 80F) | Project: | IBMF RTC |

**Compressor Data:**

| | | | | | | | |
|---|---|---|---|---|---|---|---|
| Elevation,ft: | 2030.00 | Barmtr,psia: | 13.636 | Ambient,°F: | 115.00 | **Driver Data:** | |
| Frame: | JGQ/2 | Stroke, in: | 3.00 | Rod Dia, in: | 1.125 | Type: | Electric |
| Max RL Tot, lbf: | 20000 | Max RL Tens, lbf: | 10000 | Max RL Comp, lbf: | 11000 | Mfg: | |
| Rated RPM: | 1800 | Rated BHP: | *280.0* | Rated PS FPM: | 900.0 | Model: | Electric Mot |
| Calc RPM: | 1785.0 | BHP: | 280 | Calc PS FPM: | 892.5 | BHP: | 300 |
| | | | | | | Avail: | 300 |

*Discharge*

| **Services** | **Service 1** | | | |
|---|---|---|---|---|
| Gas Model | VMG | | | |
| **Stage Data:** | **1 (SG)** | **2** | **3** | **4** |
| Target Flow, SCFM | 2000.000 | 2000.000 | 2000.000 | 2000.000 |
| Flow Calc, SCFM | 908.341 | 908.342 | 908.331 | 908.341 |
| BHP per Stage | 84.5 | 59.6 | 74.8 | 55.6 |
| Specific Gravity | 0.5900 | 0.5903 | 0.5903 | 0.5903 |
| Ratio of Sp Ht (N) | 1.2788 | 1.2799 | 1.2845 | 1.2744 |
| Comp Suct (Zs) | 0.9705 | 0.9486 | 0.9118 | 0.8488 |
| Comp Disch (Zd) | 0.9661 | 0.9496 | 0.9458 | 0.9877 |
| Pres Suct Line, psig | 164.00 | N/A | N/A | N/A |
| Pres Suct Flg, psig | 164.00 | 439.56 | 827.35 | 2116.87 |
| Pres Disch Flg, psig | 447.54 | 837.35 | *2136.98* | 4545.14 |
| Pres Disch Line, psig | N/A | N/A | N/A | 4500.00 |
| Pres Ratio F/F | 2.596 | 1.878 | 2.557 | 2.140 |
| Temp Suct, °F | 80.00 | 135.00 | 135.00 | 135.00 |
| Temp Clr Disch, °F | 135.00 | 135.00 | 135.00 | 135.00 |
| **Cylinder Data:** | **Throw 2** | **Throw 2** | **Throw 1** | **Throw 1** |
| Cyl Model | 6-1/2SP-HE | 4-3/8SP-CE | 3-5/8SG-CE | 1-3/4SG-FS-HE |
| Cyl Bore, in | 6.500 | 4.125 | 3.375 | 1.750 |
| Cyl RDP (API), psig | 545.5 | 850.0 | 2318.2 | 5545.5 |
| Cyl MAWP, psig | 600.0 | 935.0 | 2550.0 | 6100.0 |
| Cyl Action | HE | CE | CE | HE |
| Cyl Disp, CFM | 102.8 | 38.3 | 24.6 | 7.5 |
| Pres Suct Intl, psig | 141.62 | 400.94 | 795.00 | 2102.89 |
| Temp Suct Intl, °F | 86 | 138 | 139 | 138 |
| Pres Disch Intl, psig | 500.99 | 924.58 | 2232.59 | 4649.16 |
| Temp Disch Intl, °F | 248 | 255 | 291 | 248 |
| HE Suct Gas Vel, FPM | 11927 | N/A | N/A | 2665 |
| HE Disch Gas Vel, FPM | 10840 | N/A | N/A | 4863 |
| HE Spcrs Used/Max | 0/2 | N/A | N/A | N/A |
| HE Vol Pkt Avail, % | No Pkt | N/A | N/A | No Pkt |
| Vol Pkt Used, % | No Pkt | N/A % | N/A % | No Pkt |
| HE Min Clr, % | 18.57 | N/A | N/A | 24.32 |
| HE Total Clr, % | 18.57 | N/A | N/A | 24.32 |
| CE Suct Gas Vel, FPM | N/A | 10157 | 6694 | N/A |
| CE Disch Gas Vel, FPM | N/A | 10157 | 6841 | N/A |
| CE Spcrs Used/Max | N/A | 0/2 | N/A | N/A |
| CE Min Clr, % | N/A | 19.53 | 27.26 | N/A |
| CE Total Clr, % | N/A | 19.53 | 27.26 | N/A |
| Suct Vol Eff HE/CE, % | 73.7/N/A | N/A/83.4 | N/A/67.2 | 81.7/N/A |
| Disch Event HE/CE, ms | 6.3/N/A | N/A/9.0 | N/A/6.9 | 7.4/N/A |
| Suct Pseudo-Q HE/CE | 12.4/N/A | N/A/7.8 | N/A/4.6 | 0.9/N/A |
| Gas Rod Ld Comp, % | 76.5 C | 76.5 C | 93.4 C | 93.4 C |
| Gas Rod Ld Tens, % | 99.9 T | 99.9 T | 72.8 T | 72.8 T |
| Gas Rod Ld Total, % | 92.0 | 92.0 | 87.8 | 87.8 |
| Xhd Pin Deg/%Rvrsl lbf | 127/73.8 | 127/73.8 | 172/45.1 | 172/45.1 |
| Flow Calc, SCFM | 908.341 | 908.342 | 908.331 | 908.341 |
| Cyl BHP | 84.5 | 59.6 | 74.8 | 55.6 |

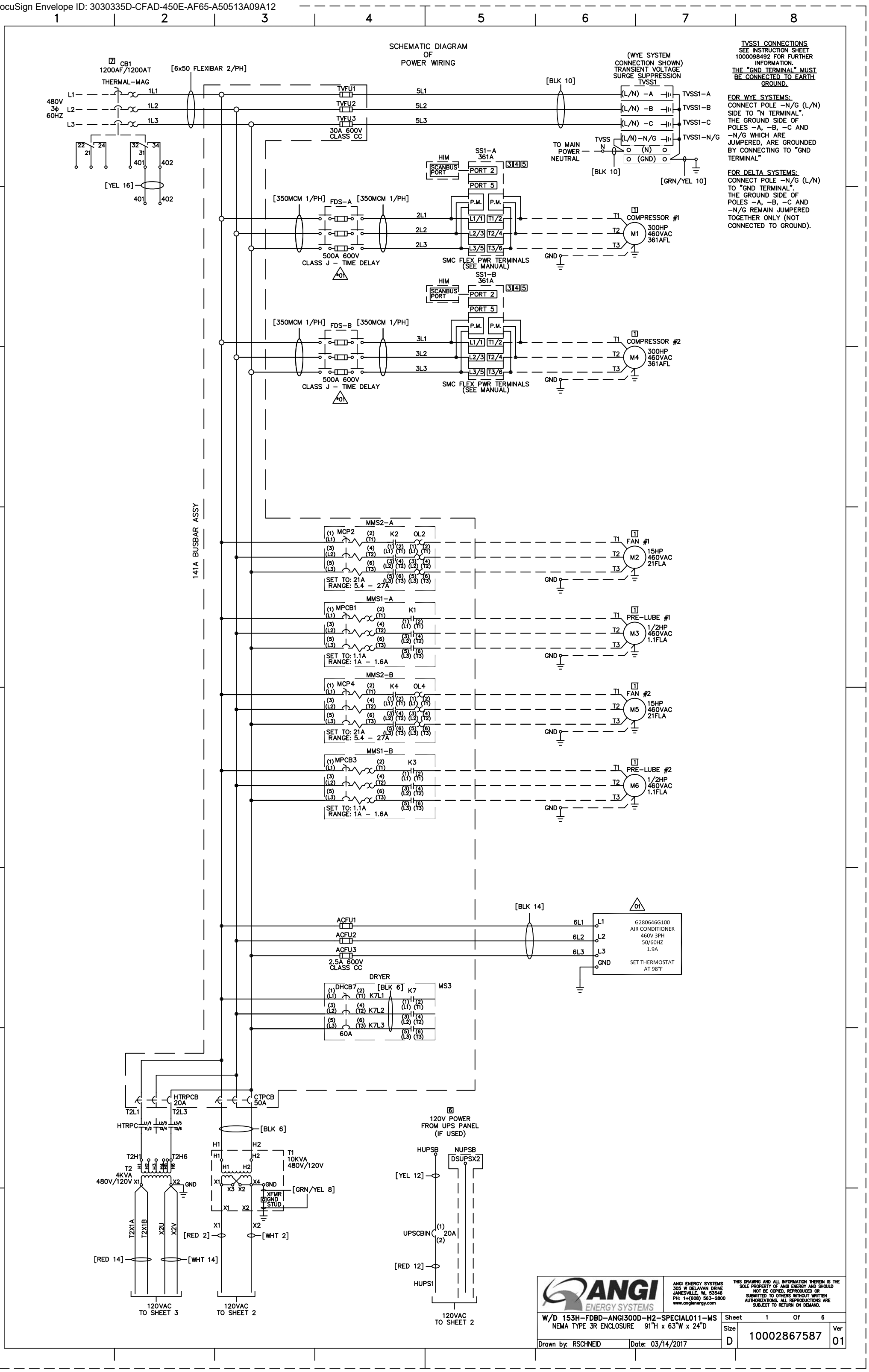

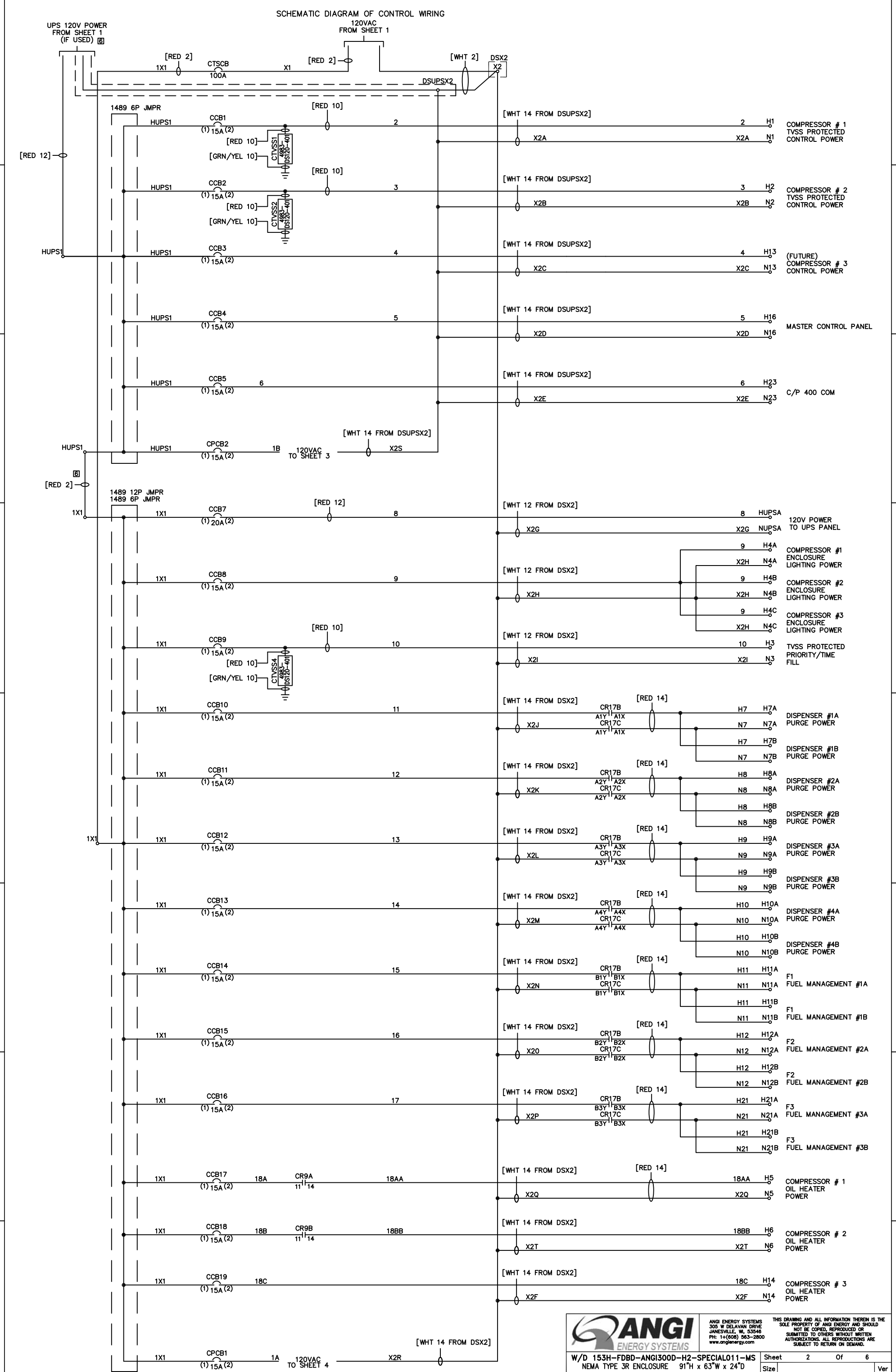

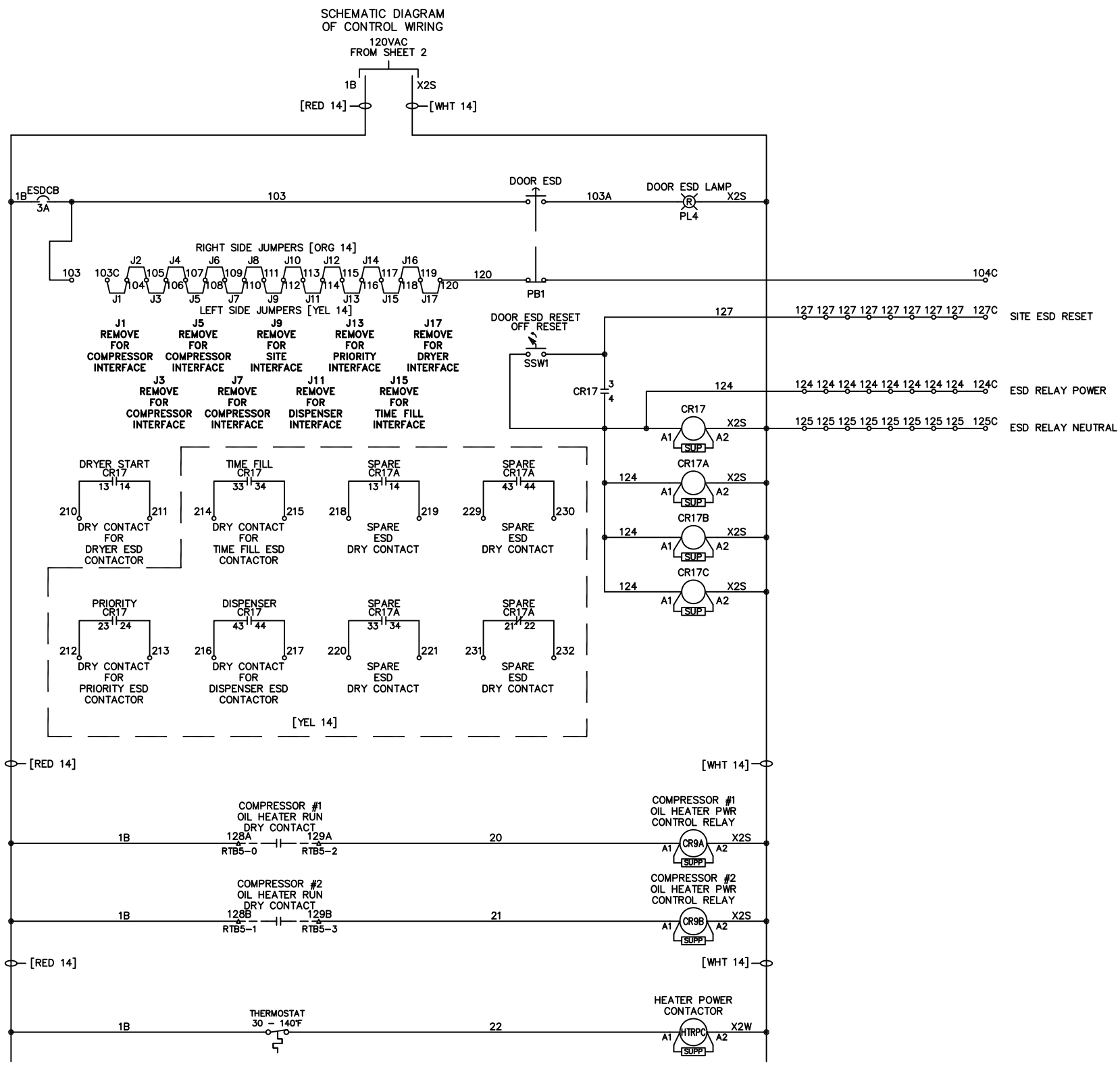


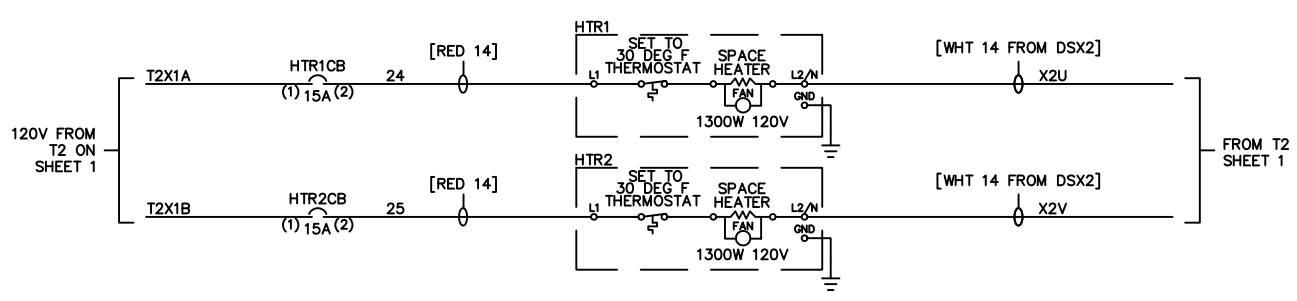


ANGI ENERGY SYSTEMS

ANGI ENERGY SYSTEMS
305 W DELAVAN DRIVE
JANESVILLE, WI. 53546
PH: 1+(608) 563-2800
www.angienergy.com



W/D 153H-FDBD-ANGI300D-H2-SPECIAL011-MS
NEMA TYPE 3R ENCLOSURE 91"H x 63"W x 24"D

Drawn by: RSCHNEID
Date: 03/14/2017

Sheet 3 Of 6
Size D
10002867587
Ver 01

# SCHEMATIC DIAGRAM OF CONTROL WIRING

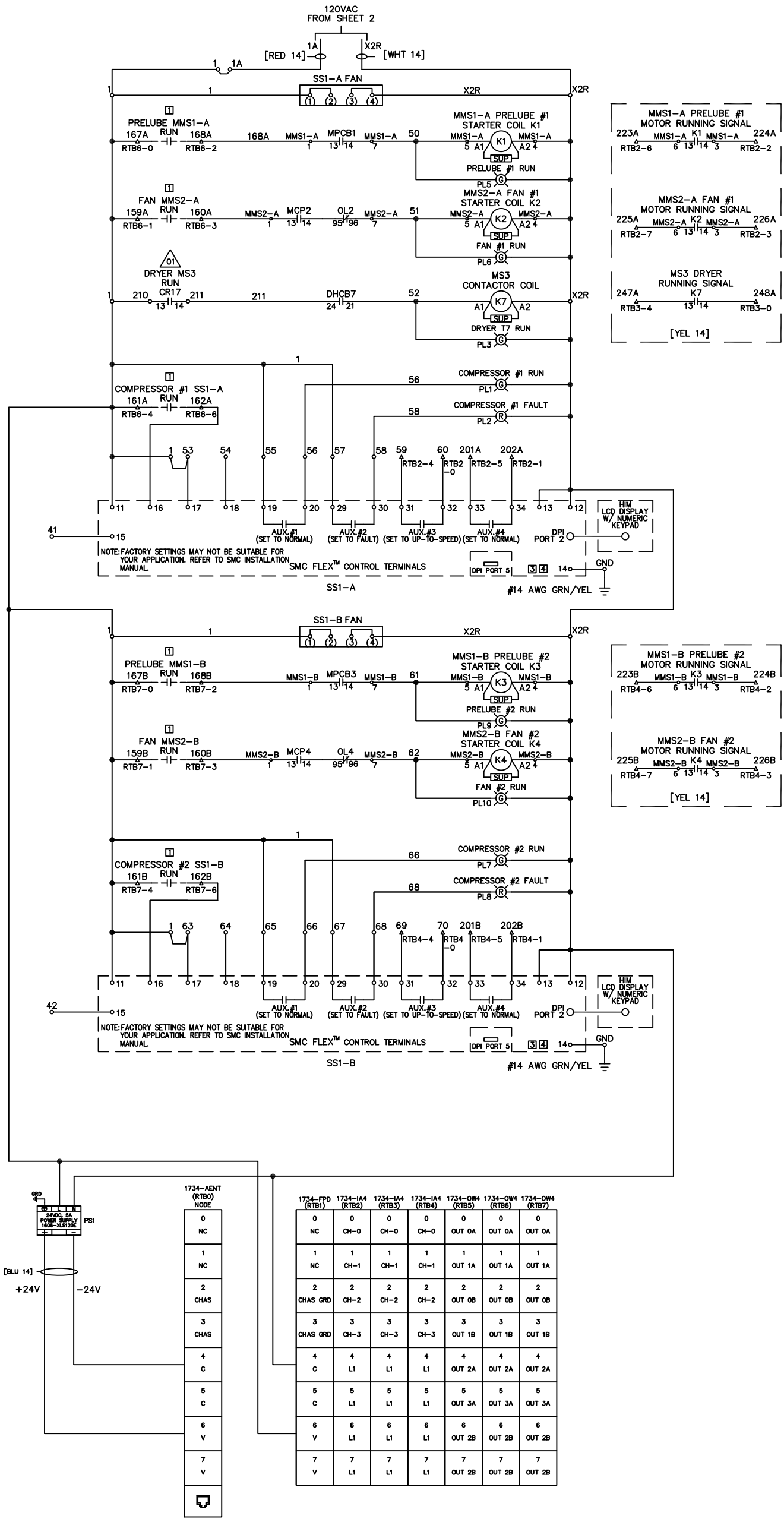





| 1734-FPD (RTB1) | 1734-IA4 (RTB2) | 1734-IA4 (RTB3) | 1734-IA4 (RTB4) | 1734-OW4 (RTB5) | 1734-OW4 (RTB6) | 1734-OW4 (RTB7) |
|---|---|---|---|---|---|---|
| 0 NC | 0 CH-0 | 0 CH-0 | 0 CH-0 | 0 OUT 0A | 0 OUT 0A | 0 OUT 0A |
| 1 NC | 1 CH-1 | 1 CH-1 | 1 CH-1 | 1 OUT 1A | 1 OUT 1A | 1 OUT 1A |
| 2 CHAS GRD | 2 CH-2 | 2 CH-2 | 2 CH-2 | 2 OUT 0B | 2 OUT 0B | 2 OUT 0B |
| 3 CHAS GRD | 3 CH-3 | 3 CH-3 | 3 CH-3 | 3 OUT 1B | 3 OUT 1B | 3 OUT 1B |
| 4 C | 4 L1 | 4 L1 | 4 L1 | 4 OUT 2A | 4 OUT 2A | 4 OUT 2A |
| 5 C | 5 L1 | 5 L1 | 5 L1 | 5 OUT 3A | 5 OUT 3A | 5 OUT 3A |
| 6 V | 6 L1 | 6 L1 | 6 L1 | 6 OUT 2B | 6 OUT 2B | 6 OUT 2B |
| 7 V | 7 L1 | 7 L1 | 7 L1 | 7 OUT 2B | 7 OUT 2B | 7 OUT 2B |

ANGI ENERGY SYSTEMS

ANGI ENERGY SYSTEMS
305 W DELAVAN DRIVE
JANESVILLE, WI, 53546
PH: 1+(608) 563-2800
www.angienergy.com



W/D 153H-FDBD-ANGI300D-H2-SPECIAL011-MS
NEMA TYPE 3R ENCLOSURE 91"H x 63"W x 24"D

Sheet 4 Of 6

Size D | 10002867587 | Ver 01

Drawn by: RSCHNEID | Date: 03/14/2017

# FIELD TERMINATIONS

## POINT I/O SIGNALS & MOTOR CONNECTIONS

| | |
|---|---|
| 128A | COMPRESSOR #1 OIL HEATER RUN |
| 129A | POINT I/O RTB5 "OUT 0" |
| 159A | FAN MOTOR M2 RUN |
| 160A | POINT I/O RTB6 "OUT 1" |
| 161A | COMPRESSOR #1 M1 RUN |
| 162A | POINT I/O RTB6 "OUT 2" |
| 167A | PRELUBE MOTOR M3 RUN |
| 168A | POINT I/O RTB6 "OUT 0" |
| 201A | COMPRESSOR # 1 M1 MOTOR |
| 202A | RUNNING POINT I/O RTB2 "CH-1" |
| 223A | PRELUBE MOTOR M3 |
| 224A | RUNNING POINT I/O RTB2 "CH-2" |
| 225A | COOLING FAN MOTOR M2 |
| 226A | RUNNING POINT I/O RTB2 "CH-3" |
| 247A | DRYER T7 |
| 248A | RUNNING POINT I/O RTB3 "CH-0" |

M1/SS1-A

| | |
|---|---|
| T1 | COMPRESSOR #1 |
| T2 | M1 MOTOR |
| T3 | SOFT STARTER |

SMC TERMINALS
(2) 199-LG1
(2) 4 AWG - 500MCM/POLE

M2/MMS2-A

| | |
|---|---|
| T1 | COMPRESSOR #1 |
| T2 | M2 COOLING FAN MANUAL MOTOR STARTER |

M3/MMS1-A

| | |
|---|---|
| T1 | COMPRESSOR #1 |
| T2 | M3 PRELUBE MOTOR MANUAL MOTOR STARTER |

T7/MS3

| | |
|---|---|
| T1 | T7 |
| T2 | DRYER CONTACTOR ESD CONTROLLED |

## CB1 LINE CONNECTIONS

| | |
|---|---|
| 247A | DRYER T7 |
| 248A | POINT I/O RTB7 "OUT 3" |
| 212 | PRIORITY ESD OK |
| 213 | DRY CONTACT |
| 214 | TIME FILL ESD OK |
| 215 | DRY CONTACT |
| 216 | DISPENSER ESD OK |
| 217 | DRY CONTACT |

CB1

| |
|---|
| L1 |
| L2 |
| L3 |

LINE TERMINALS: 140G-N-TLA43 / (4) 4/0 AWG - 500MCM/POLE

| | |
|---|---|
| 128B | COMPRESSOR #2 OIL HEATER RUN |
| 129B | POINT I/O RTB5 "OUT 1" |
| 159B | FAN MOTOR M5 RUN |
| 160B | POINT I/O RTB7 "OUT 1" |
| 161B | COMPRESSOR #2 M1 RUN |
| 162B | POINT I/O RTB7 "OUT 2" |
| 167B | PRELUBE MOTOR M6 RUN |
| 168B | POINT I/O RTB7 "OUT 0" |
| 201B | COMPRESSOR # 1 M4 MOTOR |
| 201B | RUNNING POINT I/O RTB4 "CH-1" |
| 223B | PRELUBE MOTOR M6 |
| 224B | RUNNING POINT I/O RTB4 "CH-2" |
| 225B | COOLING FAN MOTOR M5 |
| 226B | RUNNING POINT I/O RTB4 "CH-3" |

M4/SS1-B

| | |
|---|---|
| T1 | COMPRESSOR #2 |
| T2 | M4 MOTOR |
| T3 | SOFT STARTER |

SMC TERMINALS
(2) 199-LG1
(2) 4 AWG - 500MCM/POLE

M5/MMS2-B

| | |
|---|---|
| T1 | COMPRESSOR #2 |
| T2 | M5 COOLING FAN MANUAL MOTOR |
| T3 | STARTER |

M6/MMS1-B

| | |
|---|---|
| T1 | COMPRESSOR #2 |
| T2 | M6 PRELUBE MOTOR MANUAL MOTOR |
| T3 | STARTER |

## CONTROL POWER

| | |
|---|---|
| H1 / N1 | COMPRESSOR # 1 TVSS PROTECTED CONTROL POWER |
| H2 / N2 | COMPRESSOR # 2 TVSS PROTECTED CONTROL POWER |
| H13 / N13 | (FUTURE) COMPRESSOR # 3 CONTROL POWER |
| H16 / N16 | MASTER CONTROL PANEL |
| H23 / N23 | CP400 COM |
| HUPSA / NUPSA | 120V POWER TO UPS PANEL [6] |
| 01 SPARE / SPARE | SPARE TERMINALS |
| H4A / N4A | COMPRESSOR #1 ENCLOSURE LIGHTING POWER |
| H4B / N4B | COMPRESSOR #2 ENCLOSURE LIGHTING POWER |
| H4C / N4C | COMPRESSOR #3 ENCLOSURE LIGHTING POWER |
| H3 / N3 | TVSS PROTECTED PRIORITY/TIME FILL |
| H7A / N7A | DISPENSER #1A |
| H7B / N7B | DISPENSER #1B |
| H8A / N8A | DISPENSER #2A |
| H8B / N8B | DISPENSER #2B |
| H9A / N9A | DISPENSER #3A |
| H9B / N9B | DISPENSER #3B |
| H10A / N10A | DISPENSER #4A |
| H10B / N10B | DISPENSER #4B |
| H11A / N11A | F1 FUEL MANAGEMENT #1A |
| H11B / N11B | F1 FUEL MANAGEMENT #1B |
| H12A / N12A | F2 FUEL MANAGEMENT #2A |
| H12B / N12B | F2 FUEL MANAGEMENT #2B |
| H21A / N21A | F3 FUEL MANAGEMENT #3A |
| H21B / N21B | F3 FUEL MANAGEMENT #3B |
| H22A / N22A | F4 FUEL MANAGEMENT #4A |
| H5 / N5 | COMPRESSOR # 1 OIL HEATER POWER |
| H6 / N6 | COMPRESSOR # 2 OIL HEATER POWER |
| H14 / N14 | COMPRESSOR # 3 OIL HEATER POWER |

HUPSB / SPARE — DSUPSX2 — NUPSB — [6] 120V POWER FROM UPS PANEL

## NOTES

[1]
SUPPLIED BY OTHERS.

[2]
CIRCUIT BREAKER REVERSE FED

[3]
BULLETIN 150 SOLID STATE MOTOR CONTROLLER. REFER TO SMC USER MANUAL FOR APPLICATION DATA.

[4]
PROGAM THE FOLLOWING PARAMETERS
(PARAMETER 87) LOGIC MASK TO MASK CODE "4"
(PARAMETER 18) RAMP TIME – 7 SEC.
(PARAMETER 19) INITIAL TORQUE – 30%
(PARAMETER 46) MOTOR FLC – 361A

[5]
ATTENTION: HAZARDOUS VOLTAGE IS PRESENT IN THE MOTOR CIRCUIT EVEN WHEN THE SMC-FLEX CONTROLLER IS OFF. TO AVOID SHOCK HAZARD, DISCONNECT MAIN POWER BEFORE WORKING ON THE CONTROLLER, MOTOR, AND CONTROL DEVICES. SEE SMC FLEX USER MANUAL FOR MORE DETAILS.

[6]
WARNING REMOVE JUMPER IF UPS POWER SOURCE IS USED. JUMPER ONLY TO BE PRESENT IF NO EXTERNAL UPS POWER SOURCE IS UTILIZED.

[7]
GROUND FAULT PROTECTION TO BE PROVIDED AS PART OF SERVICE ENTRANCE EQUIPMENT LOCATED UPSTREAM & SUPPLIED BY OTHERS.

01
DRAWING REVISION WITH DRAWING VERSION #.

FOR POWER CIRCUIT FIELD WIRING USE 60° C COPPER WIRE IF RATED LESS THAN 100 AMPS USE 75° C COPPER WIRE IF RATED 100 AMPS OR GREATER.
TORQUE ALL FIELD CONNECTIONS TO THE VALUE SPECIFIED IN THE CUSTOMER WIRING TORQUE SPECIFICATION TABLE.
ALL FACTORY WIRED CONNECTIONS HAVE BEEN PROPERLY TORQUED AND NEED NOT BE CHECKED.

| CUSTOMER WIRING TORQUE SPECS (±10%) | |
|---|---|
| CIRCUIT BREAKER CABLE CONNECTION LINE SIDE | 380 lb-in. (43 N-m) |
| CLASS J POWER FUSES | 354...398 lb-in. (40...45 N-m) |
| SMC FLEX LOAD LUGS – WIRE INTO LUG | 375 lb-in. (42 N-m) |
| K1/K3 CONTACTOR LOAD TERMINALS | 13.3-17.0 lb-in. (1.0-2.0 N-m) |
| OL2/OL4 OVERLOAD LOAD TERMINALS | SEE OVERLOAD LABEL |
| K7 CONTACTOR LOAD TERMINALS | 22-31.0 lb-in. (2.5-3.5 N-m) |
| 1492-L3 / 1492-LG4 TERMINALS | N/A |
| 1492-LD4 / 1492-LD4C TERMINALS | N/A |

1492-JD4 TERMINAL BLOCK DEPICTION

128A / U / L / 129A – U INDICATES UPPER TERMINAL
– L INDICATES LOWER TERMINAL

1 / U / L / 1 – L INDICATES A COMMONED 1492-JD4C TB

103S STARTER CONTROL PLUG DEPICTION EXAMPLE

MMS1-A 6 13 K1 14 3 MMS1-A – (6) & (3) INDICATES TOP MOUNT CONTROL PLUG TERMINALS

128A & 167A RTB6-0 – INDICATES POINT I/O TERMINALS

ANGI ENERGY SYSTEMS

ANGI ENERGY SYSTEMS
305 W DELAVAN DRIVE
JANESVILLE, WI, 53546
PH: 1+(608) 563-2800
www.angienergy.com



W/D 153H-FDBD-ANGI300D-H2-SPECIAL011-MS
NEMA TYPE 3R ENCLOSURE 91"H x 63"W x 24"D

Sheet 5 Of 6

Size D | 10002867587 | Ver 01

Drawn by: RSCHNEID | Date: 03/14/2017

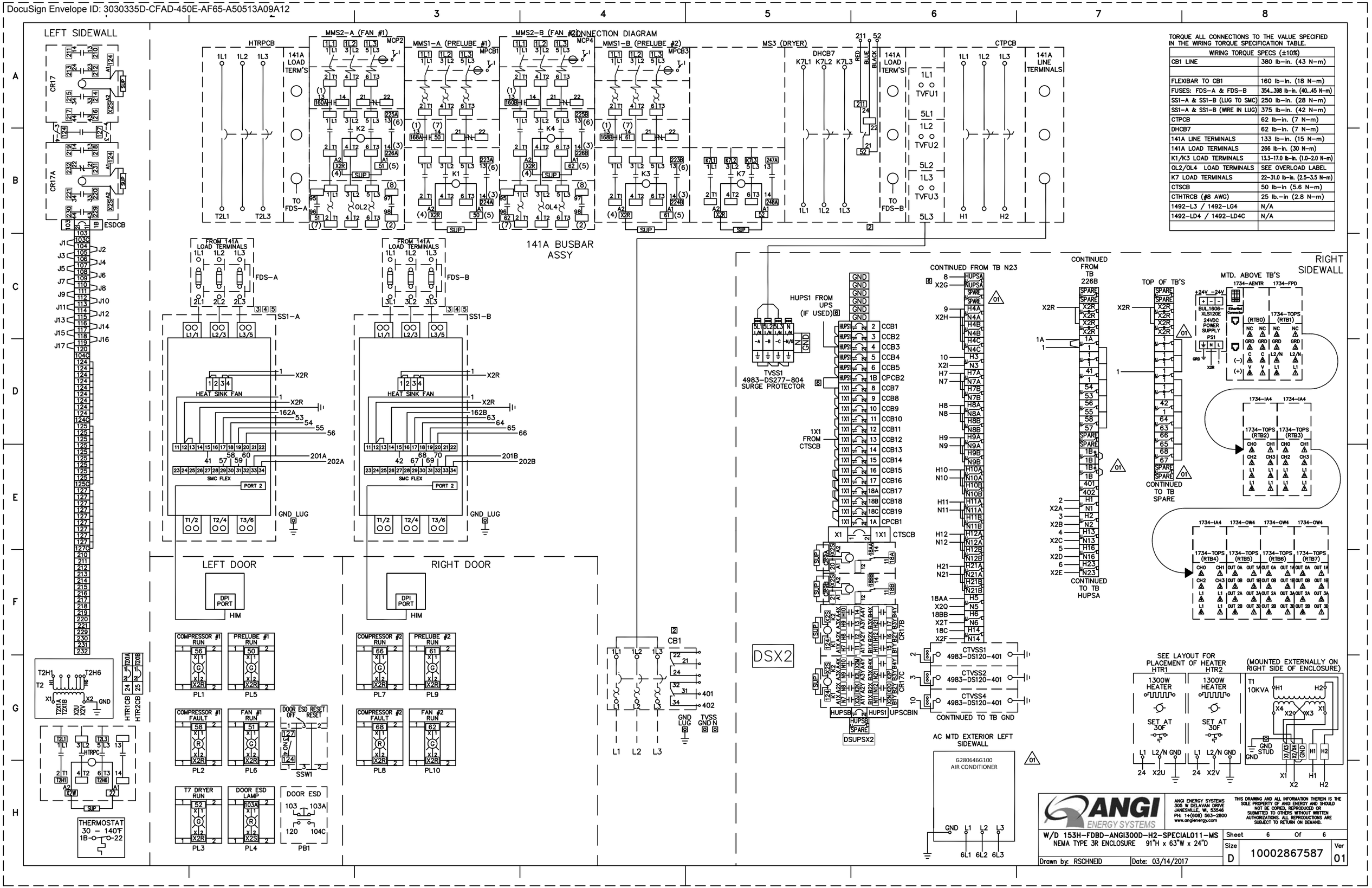


TORQUE ALL CONNECTIONS TO THE VALUE SPECIFIED IN THE WIRING TORQUE SPECIFICATION TABLE.

| WIRING TORQUE SPECS (±10%) | |
|---|---|
| CB1 LINE | 380 lb-in. (43 N-m) |
| | |
| FLEXIBAR TO CB1 | 160 lb-in. (18 N-m) |
| FUSES: FDS-A & FDS-B | 354...398 lb-in. (40...45 N-m) |
| SS1-A & SS1-B (LUG TO SMC) | 250 lb-in. (28 N-m) |
| SS1-A & SS1-B (WIRE IN LUG) | 375 lb-in. (42 N-m) |
| CTPCB | 62 lb-in. (7 N-m) |
| DHCB7 | 62 lb-in. (7 N-m) |
| 141A LINE TERMINALS | 133 lb-in. (15 N-m) |
| 141A LOAD TERMINALS | 266 lb-in. (30 N-m) |
| K1/K3 LOAD TERMINALS | 13.3-17.0 lb-in. (1.0-2.0 N-m) |
| OL2/OL4 LOAD TERMINALS | SEE OVERLOAD LABEL |
| K7 LOAD TERMINALS | 22-31.0 lb-in. (2.5-3.5 N-m) |
| CTSCB | 50 lb-in (5.6 N-m) |
| CTHTRCB (#8 AWG) | 25 lb.-in (2.8 N-m) |
| 1492-L3 / 1492-LG4 | N/A |
| 1492-LD4 / 1492-LD4C | N/A |
| | |

ANGI ENERGY SYSTEMS

ANGI ENERGY SYSTEMS
305 W DELAVAN DRIVE
JANESVILLE, WI, 53546
PH: 1+(608) 563-2800
www.angienergy.com



W/D 153H-FDBD-ANGI300D-H2-SPECIAL011-MS
NEMA TYPE 3R ENCLOSURE 91"H x 63"W x 24"D

Sheet 6 Of 6

Size D | 10002867587 | Ver 01

Drawn by: RSCHNEID | Date: 03/14/2017

PARTS MUST CONFORM TO APPLICABLE ALLEN-BRADLEY CO. WORKMANSHIP STANDARD 40126-700

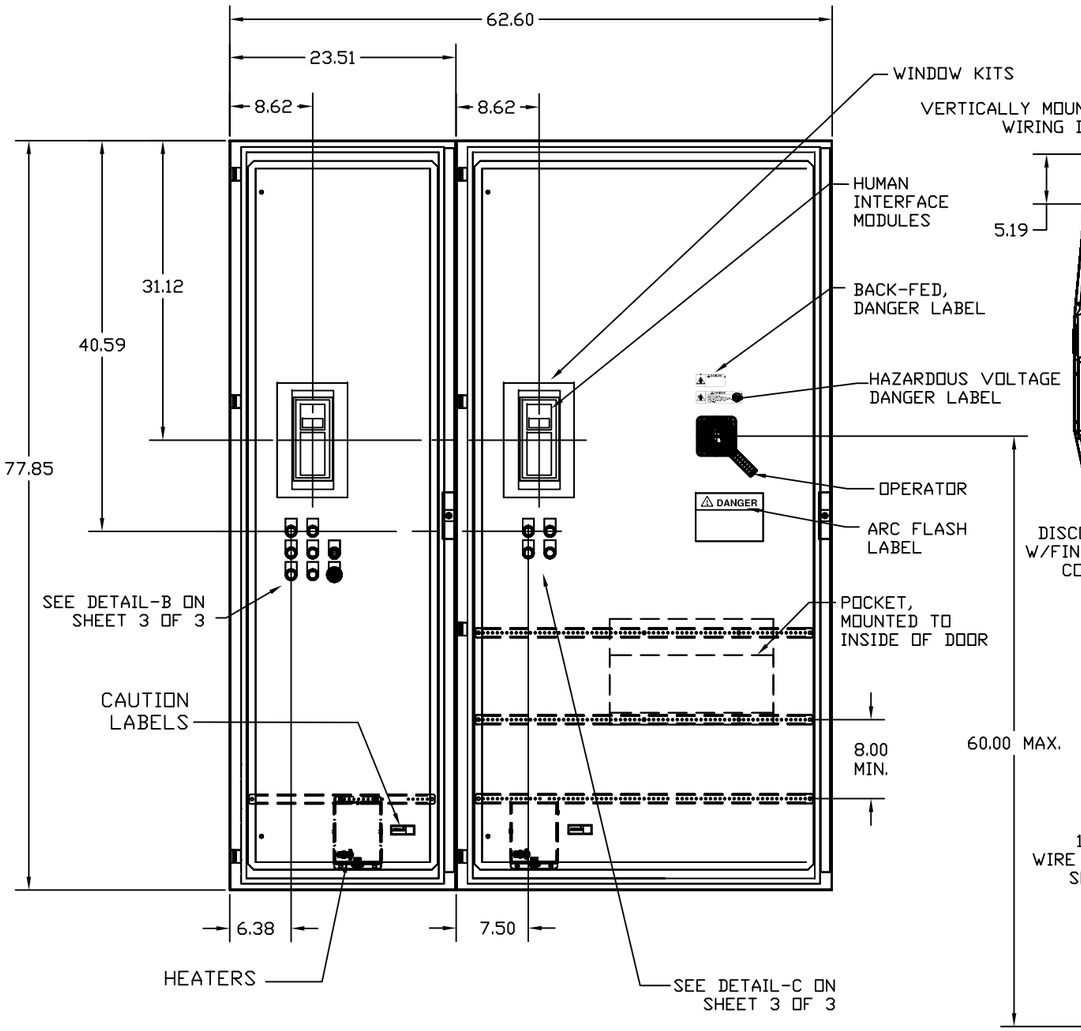


DOOR LAYOUT, (FRONT)

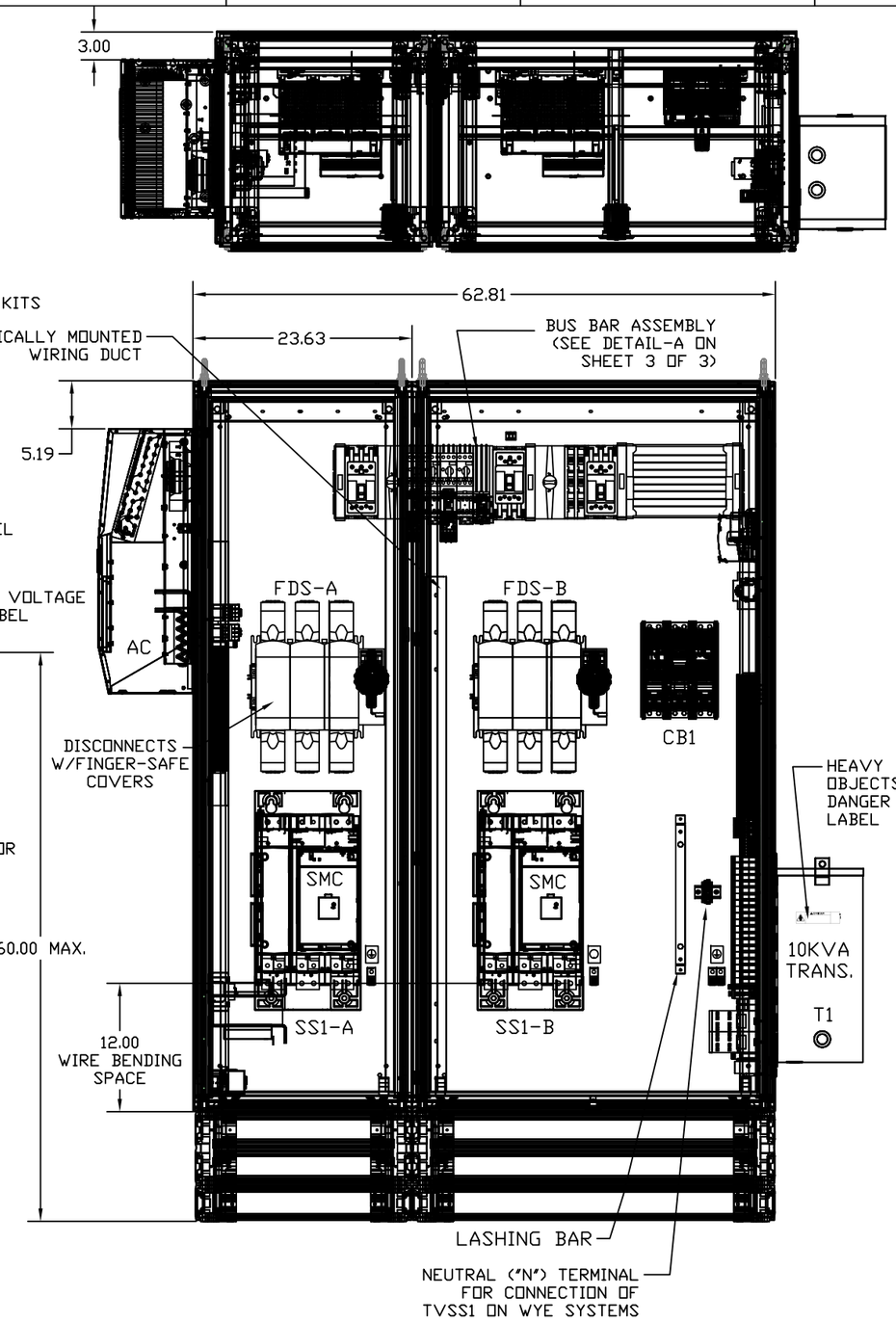


PANEL LAYOUT, (FRONT)
ENCLOSURE SHOWN W/O DOOR, THIS VIEW

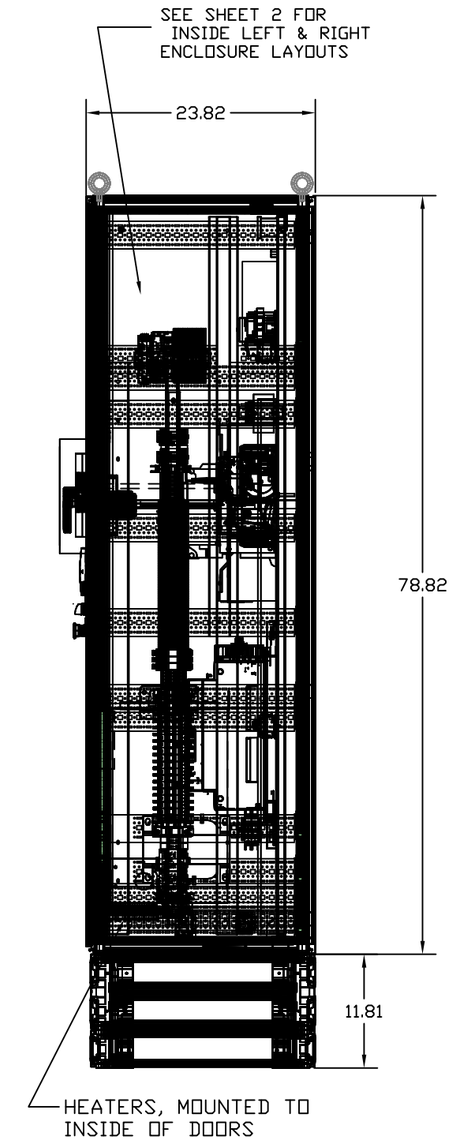


THIRD ANGLE PROJECTION

NOTE: DIMENSIONS SHOWN ARE FOR REFERENCE.

ANGI ENERGY SYSTEMS

ANGI ENERGY SYSTEMS
305 W DELAVAN DRIVE
JANESVILLE, WI. 53546
PH 1+(608) 563-2800
www.anglenergy.com



| | | | |
|---|---|---|---|
| W/L 153H-FDBD-ANGI300D-H2-SPECIAL011-MS | | Sheet 1 Of 3 | |
| NEMA TYPE 3R ENCLOSURE 90.63"H x 63"W x 24"D | | Size D | 10002900085 | Ver 00 |
| Drawn by: LJDAMS | Date: 02/10/2017 | | |

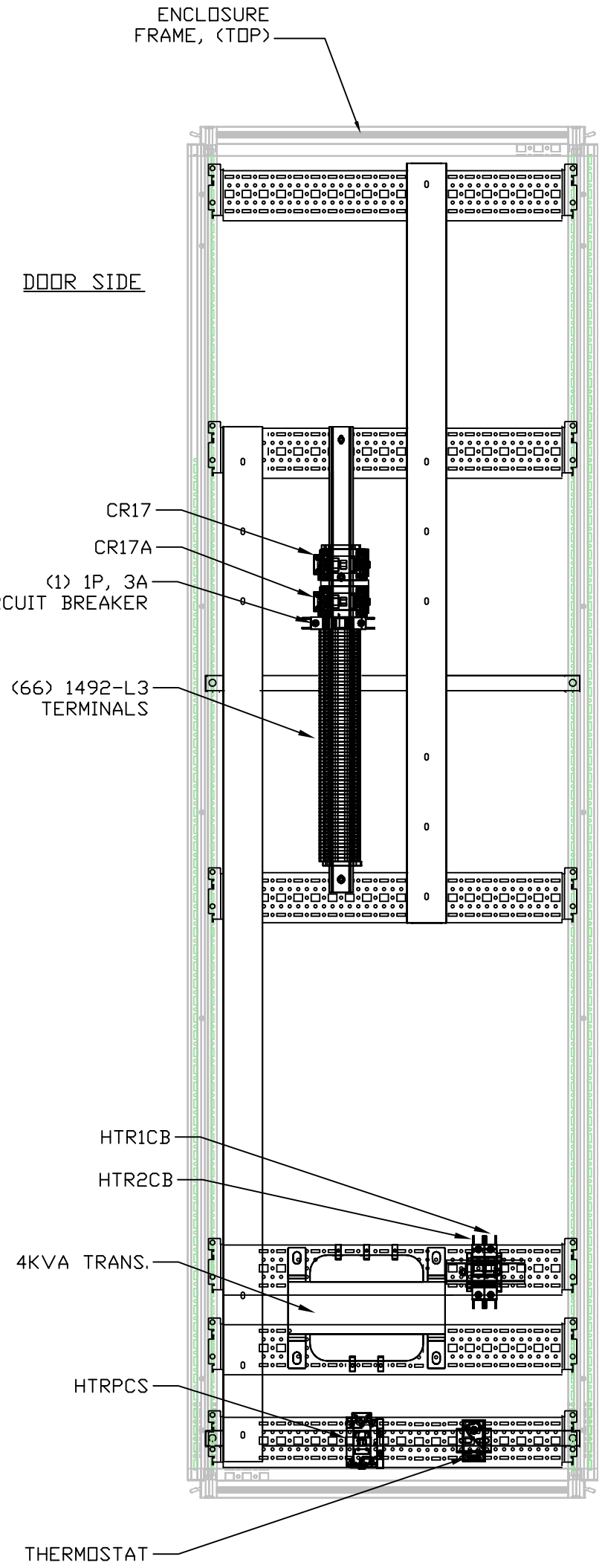


INSIDE LEFT VIEW OF L.H. ENCLOSURE

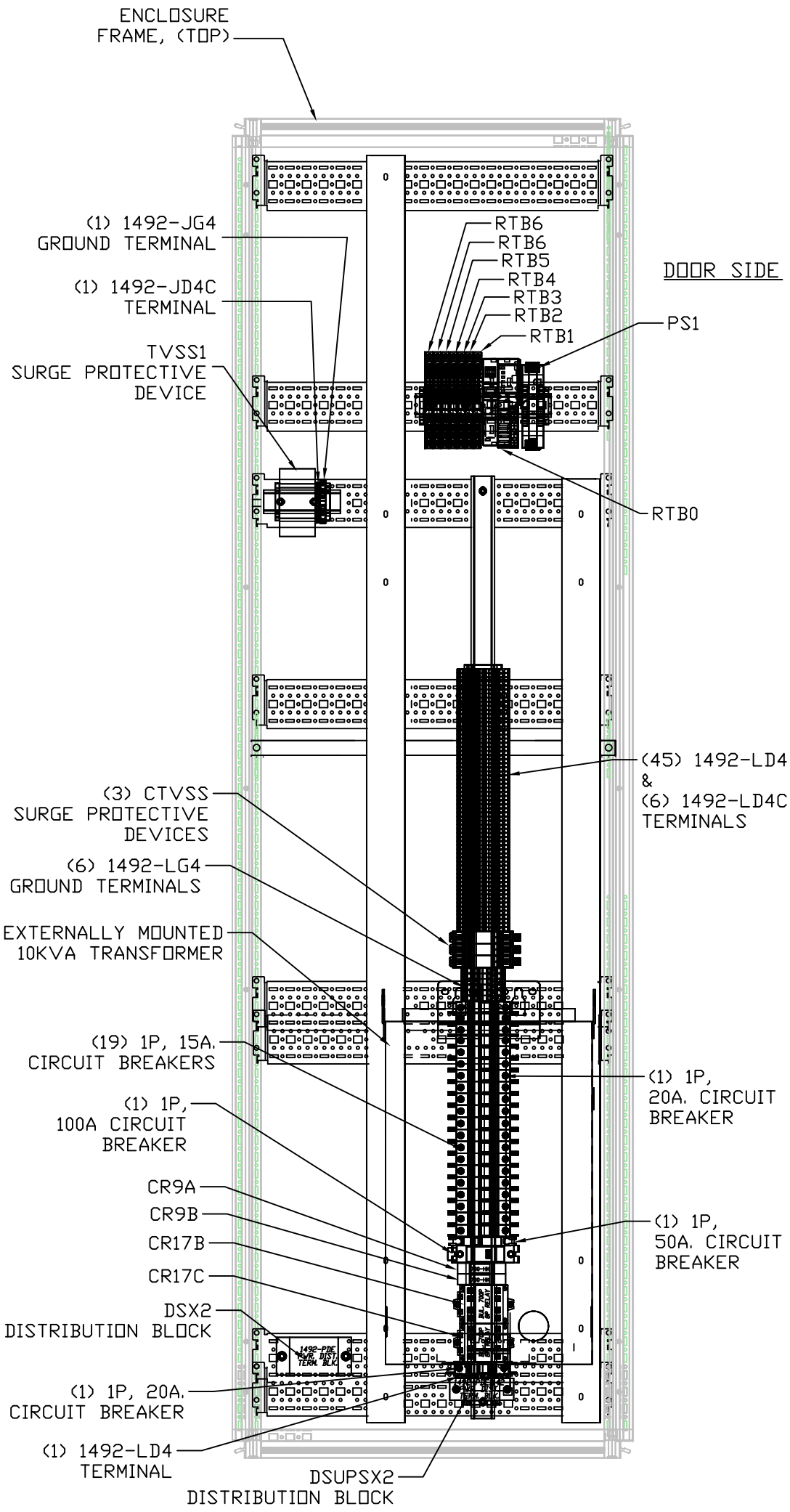


INSIDE RIGHT VIEW OF R.H. ENCLOSURE

ANGI ENERGY SYSTEMS

ANGI ENERGY SYSTEMS
305 W DELAVAN DRIVE
JANESVILLE, WI, 53546
PH: 1+(608) 563-2800
www.anglenergy.com



W/L 153H-FDBD-ANGI300D-H2-SPECIAL011-MS
NEMA TYPE 3R ENCLOSURE 90.63"H x 63"W x 24"D

Sheet 2 Of 3

Size D | 10002900085 | Ver 00

Drawn by: LJDAMS | Date: 02/10/2017

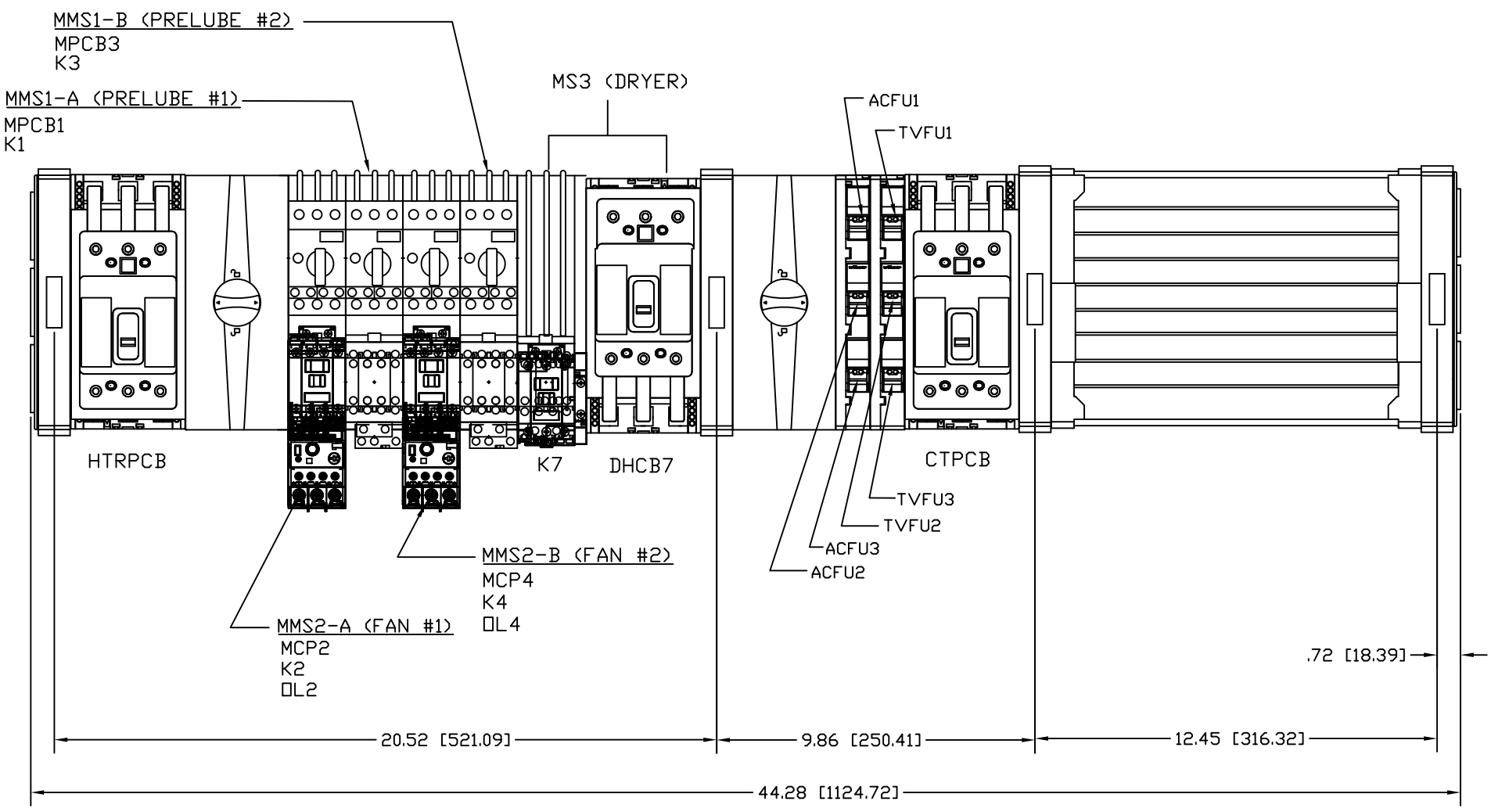


DETAIL-A
(BUSBAR ASSEMBLY)

NOTE: DIMENSIONS SHOWN IN PARENTHESIS ARE MILLIMETERS

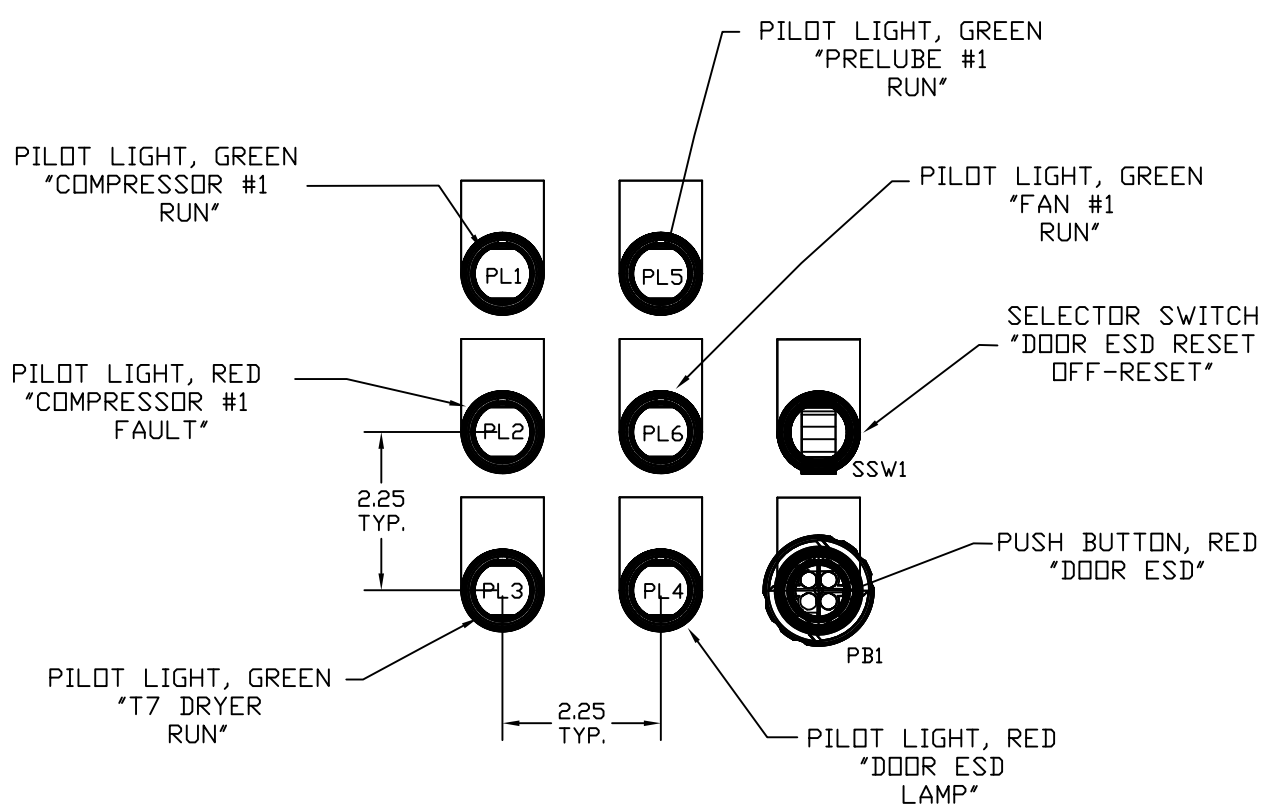


DETAIL-B
(PILOT DEVICES ON LEFT ENCLOSURE DOOR)

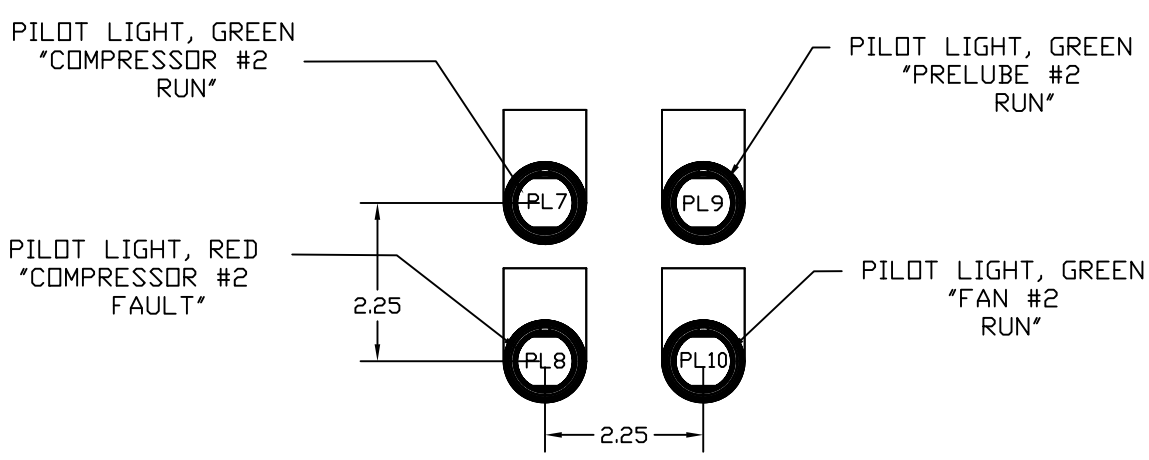


DETAIL-C
(PILOT DEVICES ON RIGHT ENCLOSURE DOOR)

ANGI ENERGY SYSTEMS

ANGI ENERGY SYSTEMS
305 W DELAVAN DRIVE
JANESVILLE, WI. 53546
PH: 1+(608) 563-2800
www.anglenergy.com



W/L 153H-FDBD-ANGI300D-H2-SPECIAL011-MS
NEMA TYPE 3R ENCLOSURE 90.63"H x 63"W x 24"D

Sheet 3 Of 3

Size D | 10002900085 | Ver 00

Drawn by: LJDAMS | Date: 02/10/2017